®

Zakład Produkcyjno Usługowy
Międzyrzecz
POLSKIE RURY PREIZOLOWANE Sp. z o. o.
66-300 Międzyrzecz, ul. Zakaszewskiego 4

PRODUCT CATALOGUE

ZPU MIĘDZYRZECZ Sp. z o. o.
PREINSULATED PIPE SYSTEM
TO FOR DIRECTLY BURIED HOT WATER DISTRICT HEATING NETWORKS

April 2026

www.zpum.pl **zpu@zpum.pl**

Contents

1 General Information on Application of ZPU Międzyrzecz Sp. z o. o. Preinsulated Tubes and Fittings 1

2 Properties of Materials Used in Preinsulated Pipes and Fittings by ZPU Międzyrzecz Sp. z o.o. 2

3 Pipe Insulation Moisture Detection System 2

4 Cross-sections of Jacket and Carrier Pipes 3

5 Preinsulated pipes 4

5.1 Straight preinsulated pipes 4
5.2 Straight preinsulated pipes with diffusion barier 5
5.3 Straight Preinsulated Pipes with polyethylene barrier 6
5.4. Preinsulated Bend Pipes 7
6 Specification of Preinsulated Fittings 8

6.1 Elbow 90º 8
6.2 Elbow xxº (any angle) 9
6.3 Elevated tee 10
6.4 Reducing lateral tee 11
6.5 Elevated Tee – Mk. 2 12
6.6 Strainer Tee 13
6.7 Strainer Tee- Mk. 2 14
6.8 Vent Tee 15
6.9 Vent Tee – Mk. 2 16
6.10 Parallel Tee 17
6.11 Flat Tee 18
6.12 Flat Tee Mk.2 19
6.13 Elevated Tee for DAR-FLEX system 20
6.14 Parallel Tee for DAR-FLEX system 21
6.15 Reducing pipe 22
6.16 Transition Fittings 23
6.17 Wall Mounted Fixed Point 24
6.18 Angle fixed point xxº 25
6.19 Single bellow longitudinal compensator operating under a nominal pressure of 1.6 MPa 26
6.20 Single bellow longitudinal compensator operating under a nominal pressure of 2.5 MPa 27
7 Preinsulated Steel Fittings- Valves 28

7.1 Shutoff Ball Valve 28
7.2 Vent ball valve 29
7.3 Strain Ball Valve 30
7.4 Shutoff ball valve and vent valve assembly 31
7.5 Single strain valve shutoff ball valve 32
7.6 Strain and vent shutoff ball valve 33
8 Coupling Unit 34

8.1 Common coupling N 34
8.2 Heat shrinkable couplings 35
8.2.1 Heat shrinkable coupling NT 35
8.2.2 Radiation crosslinked heat shrinkable coupling - NTX+M 36
8.2.3 Heat shrinkable radiation crosslinked joint, NTX-II type 37
8.2.4 Dry heat shrinkable coupling NTS 38
8.2.5 Heat shrinkable bend coupling – NSRK 39
8.3 Electrically Welded Coupling 40

8.3.1 Electrically Welded Coupling - close type 40
8.3.2 Butt Welded Coupling DX II - open type 41
9 Insulation and pipeline closing 43

9.1 Pipeline Closing – End Sleeve 43
9.2 End Cap – heat shrinkable sleeve 44
10 Warning tape 44

11 Wall transition 45

11.1 Rubber ring 45
11.2 Branch-off protective tube – joint adapter 45
12 Mains Branching Off 46

11.1 Cold inset 46
11.2 Hot inset 47
13 Expansion Cushions. 48

14 Leak detection system 49

15 Commercial information 51

1 General Information on Application of ZPU Międzyrzecz Sp. z o. o. Preinsulated Tubes and Fittings

Preinsulated tubes and fittings by ZPU Międzyrzecz Sp. z o.o are to be used in the construction of thermal distribution networks, whose function is to transmit a heating medium from its source up to the reception point. Preinsulated tubes and fittings are resistant to the medium with maximal working temperature of 165°C predicted for thirty-year lifetime.

The function of preinsulated tubes and fittings manufactured by is to transmit a heating medium, characterised either by high or low working parameters, hot water or other media used for process or construction purposes.

Preinsulated tubes and fittings by ZPU Międzyrzecz Sp. z o.o are composed of a steel line tube coaxially fitted in a casing pipe made of hard polyethylene of high density (PEHD) and a layer of thermal insulation either standard or standard, plus or plus plus made of rigid polyurethane foam (PUR) filling up the space between the pipes. ZPU Międzyrzecz Sp. z o.o preinsulated pipes, used in the transmission of hot water, are manufactured within the nominal diameters of 20 to 1200 mm, in standard lengths of 6 m,12 m and 16 m[1]. Preinsulated products with galvanized steel carrier pipe are 6 m long, while the diameter range varies between 20 and 200 mm. The ends of preinsulate pipes and fittings are not insulated over a length of 150 mm $^{\pm 10mm}$ at diameters op to 200 mm, and overa length of 200 mm $^{\pm 10mm}$ for diameters 250 mm and more.

The pipes are produced by the continuous method (with or without an aluminum barrier) up to the diameter of the casing pipe Dz 355 mm, and by injection and foaming of PUR foam components in the full range of diameters.

ZPU Międzyrzecz Sp. z o. o. preinsulated pipes and fittings meet the requirements set down by standards **PN-EN 253**, **PN-EN- 448**, **PN-EN 488**, **PN-EN- 489**, **PN - EN 13941 and PN-EN 14419.**

Tees are made in solutions in accordance with PN EN 448, as directly welded, reinforced, with a "pull neck" and forged. As a standard, we produce tees as directly welded, while for tees where the diameter of the passage and recoil are the same as forged tees. If a different solution is required, it should be specified at the inquiry stage and confirmed in the order. There is also a possibility of making tees from the so-called "Pull-neck" on HDPE conduit.

In order to protect the PUR foam against oxygen diffusion, an aluminium diffusion barrier can be used between the insulation and the protective casing or inside the protective casing, or a protective casing made of polyethylene (PE-HD) with a thickened wall - polyethylene barrier - can be used.

In the case of fittings with a polyethylene barrier (thickened wall of the casing pipe), the product symbol is created by adding its wall thickness to the diameter of the casing pipe (e.g. K-20 (90 * 5.0) / 90º, TW-32 (110 * 5.0) / 25 (90 * 5.0), etc.).

Suitability for use in construction of a construction product under the name: “Pre-insulated pipes, fittings and joint assemblies ZPU Międzyrzecz Sp.z o.o., to underground heating networks "states: National Technical Assessment ITB-KOT-2018/0286 edition 2, validity date 30 December 2024.

2 Properties of Materials Used in Preinsulated Pipes and Fittings by ZPU Międzyrzecz Sp. z o.o.

CARRIER PIPE

The service pipe is an attested, seamless, seamed, galvanized or other steel pipe made in accordance with the Contractor's order

To increase the adhesion of rigid polyurethane foam (PUR) to steel pipe, the external surface of the steel pipe is shot blasted till it attains grade cleanliness Sa 2 according to PN-EN ISO 8501-1.

Pipe ends are bevelled and ready to be welded according to PN-EN ISO 9692-1.

THERMAL (HEAT) INSULATION

Insulation is made of rigid polyurethane foam (PUR) homogenously filling the space between the pipes over the total length and in compliance with standard **PN-EN- 253.**

CASING PIPE

The casing pipe is made in accordance with the requirements of PN EN 253 with high density polyethylene (PEHD) in the PE 100 class.

The inner surface of polyethylene pipes is activated by the electrocoronation method to increase the adhesion of the rigid polyurethane foam.

The protective casing of pre-insulated pipes, fittings, armature and joint units of the ZPU Międzyrzecz Sp. z o.o. system has a test confirming the use of the products for the construction of above-ground heating networks.

3 Pipe Insulation Moisture Detection System

Preinsulated pipes and fittings ZPU Międzyrzecz Sp. z o.o. can be equipped with any system for detecting moisture in polyurethane insulation, i.e. impulse system (Nordic), resistive system (Brandes), HDW system or another indicated by the Customer. The installation consists of pipes built into the thermal insulation layer. This system signals moisture in the insulation where it occurs.

4 Cross-sections of Jacket and Carrier Pipes

ZPU Międzyrzecz Sp. z o. o. pipes and fittings are manufactured from jacket and carrier pipes of the following diameters:

Steel Carrier Pipe				PEHD Jacket Pipe			PEHD Jacket Pipe			PEHD Jacket Pipe		
				Insulation standard **(Seria 1)**			Insulation plus **(Seria 2)**			**Insulation Plus Plus (Seria 3)**		
DN	Dz	**welded**	**seamless**	Dzp	gp	gpp	Dzp	gp	gpp	Dzp	gp	gpp
		min[g]	min[g]		min. stand.)	min. thick.		min. stand.	min. thick.		min. stand.	min. thick.
mm	mm	mm	mm	mm	mm	mm	mm	mm	mm	mm	mm	mm
20	26,9	2,6	2,9	90 (75*)	3,0 (3,0*)	5,0 (5,0*)	110 (90*)	3,0 (3,0*)	5,0 (5,0*)	125 (110*)	3,0 (3,0*)	5,0 (5,0*)
25	33,7	2,6	2,9	90	3,0	5,0	110	3,0	5,0	125	3,0	5,0
32	42,4	2,6	2,9	110	3,0	5,0	125	3,0	5,0	140	3,0	5,0
40	48,3	2,6	2,9	110	3,0	5,0	125	3,0	5,0	140	3,0	5,0
50	60,3	2,9	3,2	125	3,0	5,0	140	3,0	5,0	160	3,0	5,0
65	76,1	2,9	3,2	140	3,0	5,0	160	3,0	5,0	200 (180*)	3,0 (3,0*)	5,0 (5,0*)
80	88,9	3,2	3,6	160	3,0	5,0	200 (180*)	3,2 (3,0*)	5,2 (5,0*)	225 (200*)	3,4 (3,2*)	5,4 (5,2*)
100	114,3	3,6	4,0	200	3,2	5,2	225	3,4	5,4	250	3,6	5,6
125	139,7	3,6	4,0	225	3,4	5,4	250	3,6	5,6	315 (280*)	4,1 (3,9*)	5,5 (5,7*)
150	168,3	4,0	4,5	250	3,6	5,6	315 (280*)	4,1 (3,9*)	5,5 (5,7*)	355 (315*)	4,5 (4,1*)	6,0 (5,5*)
200	219,1	4,5	6,3	315	4,1	5,5	355	4,5	6,0	400	4,8	6,3
250	273,0	5,0	7,1	400	4,8	6,3	450	5,2	6,7	500	5,6	7,1
300	323,9	5,6	7,1	450	5,2	6,7	500	5,6	7,1	560 (520*)	6,0 (5,7*)	7,5 (7,1*)
350	355,6	5,6	8,0	500	5,6	7,1	560 (520*)	6,0 (5,7*)	7,5 (7,1*)	630 (560*)	6,6 (6,0*)	7,6 (7,5*)
400	406,4	6,3	8,8	560 (520*)	6,0 (5,7*)	7,5 (7,1*)	630 (560*)	6,6 (6,0*)	7,6 (7,5*)	710 (630*) (670*)	7,2 (6,6*) (6,9*)	7,2 (7,6*) (6,9)*
450	457,0	6,3	10,0	630 (560*)	6,6 (6,0*)	7,6 (7,5*)	710 (630*) (670*)	7,2 (6,6*) (6,9*)	7,2 (7,6*) (6,9*)	800 (670*) (710*)	7,9 (6,9*) (7,2*)	7,9 (6,9*) (7,2*)
500	508,0	6,3	11,0	710 (630*) (670*)	7,2 (6,6*) (6,9*)	7,2 (7,6*) (6,9*)	800 (670*) (710*)	7,9 (6,9*) (7,2*)	7,9 (6,9*) (7,2*)	900 (800*)	8,7 (7,9*)	8,7 (7,9*)
600	610,0	7,1	-	800 (780*)	7,9 (7,7*)	7,9 (7,7*)	900	8,7	8,7	1000	9,4	9,4
700	711,0	8,0	-	900	8,7	8,7	1000	9,4	9,4	1100	10,2	10,2
800	813,0	8,8	-	1000	9,4	9,4	1100	10,2	10,2	1200	11,0	11,0
900	914,0	10,0	-	1100	10,2	10,2	1200	11,0	11,0	1300	11,8	11,8
1000	1016,0	11,0	-	1200	11,0	11,0	1300	11,8	11,8	1400	12,5	12,5
1100	1118,0	11,0	-	1300	11,8	11,8	1400	12,5	12,5	-	-	-
1200	1219,0	12,5	-	1400	12,5	12,5	-	-	-	-	-	-

DN - steel pipe nominal diameter;, Dz - external diameter, Dzp – external diameter jacket pipe, gp – standard wall thickness, for pipes with a diffusion barrier and without a barrier; gpp – thickened wall, which is a diffusion barrier.
* jacket pipe diameters produced on individual order.

The recommended diameters of casing pipes for pre-insulated pipes and fittings are given in the tables later in the catalogue. The tables provide geometric dimensions of pipes and fittings up to DN 600. In the case of products with nominal diameters greater than DN 600, geometric dimensions should be agreed individually. In the specification of the ordered pre-insulated products, the steel grade of the carrier pipe (seamed, seamless or other), the type (series) of thermal insulation, the type of moisture detection system built into the polyurethane insulation or its absence, and in the case of pipes also their length and the symbols specified in the catalogue should be used.

The specification of the pre-insulated products ordered should include the kind pipe's steel grade (welded, seamless or other), type (series) of thermal insulation, type of moisture detection system built into the polyurethane insulation or its absence, and in the case of pipes, also their length and symbols specified in the catalogue.

5 Preinsulated pipes

5.1 Straight preinsulated pipes

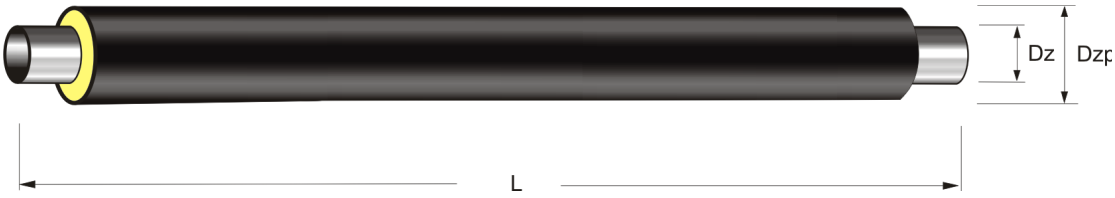

Table 1

Steel Carrier Pipe		Jacket pipe	Lenght	Weight		Catalogue reference number
Nominal diameter	External diameter	External diameter		seamless	welded	
DN	Dz	Dzp	L	1m	1m	
mm	*mm*	*mm*	*m*	*kg*	*kg*	
20	26,9	75	6;12**	2,7	2,5	**R-20/75**
25	33,7	90	6;12	3,2	3,0	**R-25/90**
32	42,4	110	6;12	4,2	3,9	**R-32/110**
40	48,3	110	6;12	4,6	4,3	**R-40/110**
50	60,3	125	6;12	6,7	5,7	**R-50/125**
65	76,1	140	6;12	7,7	7,2	**R-65/140**
80	88,9	160	6;12	10,0	9,8	**R-80/160**
100	114,3	200	6;12;16**	14,3	13,2	**R-100/200**
125	139,7	225	6;12;16*	17,5	16,2	**R-125/225**
150	168,3	250	6;12;16*	22,9	21,0	**R-150/250**
200	219,1	315	6;12;16*	40,4	31,2	**R-200/315**
250	273,0	400	6;12;16*	58,7	45,2	**R-250/400**
300	323,9	450	6;12;16*	70,1	58,6	**R-300/450**
350	355,6	500	6;12;16*	86,8	66,6	**R-350/500**
400	406,4	560	6;12;16*	108,0	83,9	**R-400/560**
450	457,0	560	6;12;16*	130,6	90,6	**R-450/560**
500	508,0	710	6;12;16*	166,7	109,6	**R-500/710**
600	610,0	800	6;12;16*	-	149,3	**R-600/800**
700	711,0	900	6;12;16*	-	180,4	**R-700/900**
800	813,0	1000	6;12;16*	-	222,9	**R-800/1000**
900	914,0	1100	6;12;16*	-	276,9	**R-900/1100**
1000	1016,0	1200	6;12;16*	-	335,8	**R-1000/1200**
1200	1219,0	1400	6;12;16*	-	448,1	**R-1200/1400**

Note: When ordering specify steel grade (welded, seamless or other). Preinsulated pipes of diameters exceeding DN 600 - DN 1200 are manufactured if their length and filling diameter (insulation thickness) have been agreed with the customer.
*Pipes with length L=16 m are manufacturing on individual customer's request.
** Optional production after individual agreement.

5.2 Straight preinsulated pipes with diffusion barier

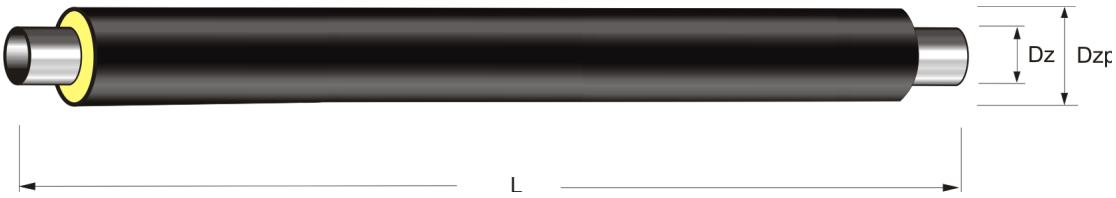

Table 1A

Steel Carrier Pipe		Jacket pipe	Lenght	Weight		Catalogue reference number
Nominal diameter	External diameter	External diameter		Nominal diameter	External diameter	
DN	Dz	Dzp	L	1m	1m	
mm	mm	mm	m	kg	kg	
25	33,7	90	6;12	3,2	3,0	RBAL-25/90
32	42,4	110	6;12	4,2	3,9	RBAL-32/110
40	48,3	110	6;12	4,6	4,3	RBAL-40/110
50	60,3	125	6;12	6,7	5,7	RBAL-50/125
65	76,1	140	6;12	7,7	7,2	RBAL-65/140
80	88,9	160	6;12	10,0	9,8	RBAL-80/160
100	114,3	200	6;12;16**	14,3	13,2	RBAL-100/200
125	139,7	225	6;12;16*	17,5	16,2	RBAL-125/225
150	168,3	250	6;12;16*	22,9	21,0	RBAL-150/250
200	219,1	315	6;12;16*	40,4	31,2	RBAL-200/315
250	273,0	400	6;12;16*	58,7	45,2	RBAL-250/400
300	323,9	450	6;12;16*	70,1	58,6	RBAL-300/450
350	355,6	500	6;12;16*	86,8	66,6	RBAL-350/500
400	406,4	560 (520***)	6;12;16*	108,0	83,9	RBAL-400/560

* Pipes with length L=16 m are manufacturing on individual customer's request.

** Optional production after individual agreement.
*** Jacket pipes diameters are manufacturing on individual customer's request.

5.3 Straight Preinsulated Pipes with polyethylene barrier

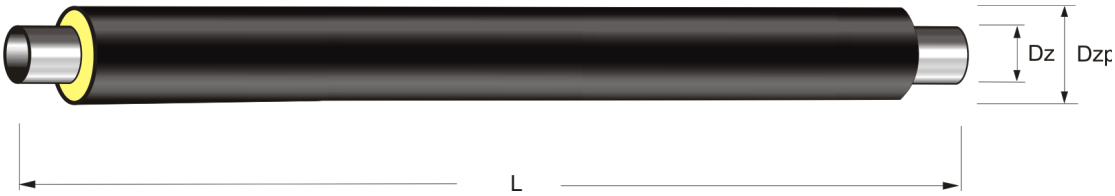

Table 1B

Steel Carrier Pipe		Jacket pipe	Lenght	Weight		Catalogue reference number
Nominal diameter	External diameter	External diameter		seamless	welded	
DN	Dz	Dzp	L	1m	1m	
mm	*mm*	*mm*	*m*	*kg*	*kg*	
20	26,9	75	6;12**	2,7	2,5	**RBP-20/75*5,0**
25	33,7	90	6;12	3,2	3,0	**RBP-25/90*5,0**
32	42,4	110	6;12	4,2	3,9	**RBP-32/110*5,0**
40	48,3	110	6;12	4,6	4,3	**RBP-40/110*5,0**
50	60,3	125	6;12	6,7	5,7	**RBP-50/125*5,0**
65	76,1	140	6;12	7,7	7,2	**RBP-65/140*5,0**
80	88,9	160	6;12	10,0	9,8	**RBP-80/160*5,0**
100	114,3	200	6;12;16**	14,3	13,2	**RBP-100/200*5,2**
125	139,7	225	6;12;16*	17,5	16,2	**RBP-125/225*5,4**
150	168,3	250	6;12;16*	22,9	21,0	**RBP-150/250*5,6**
200	219,1	315	6;12;16*	40,4	31,2	**RBP-200/315*5,5**
250	273,0	400	6;12;16*	58,7	45,2	**RBP-250/400*6,3**
300	323,9	450	6;12;16*	70,1	58,6	**RBP-300/450*6,7**
350	355,6	500	6;12;16*	86,8	66,6	**RBP-350/500*7,1**
400	406,4	560	6;12;16*	108,0	83,9	**RBP-400/560*7,5**
450	457,0	560	6;12;16*	130,6	90,6	**RBP-450/560*7,5**
500	508,0	630	6;12;16*	161,3	104,2	**RBP-500/630*7,6**

Note: When ordering specify steel grade (welded, seamless or other). Preinsulated pipes of diameters exceeding DN 600 - DN 1200 are manufactured if their length and filling diameter (insulation thickness) have been agreed with the customer.

* Pipes with length L=16 m are manufacturing on individual customer's request.

** Optional production after individual agreement.

*** For pipes with a diameter above DN 500/630, the diffusion barrier is the standard wall thickness of the casing pipe.

5.4. Preinsulated Bend Pipes

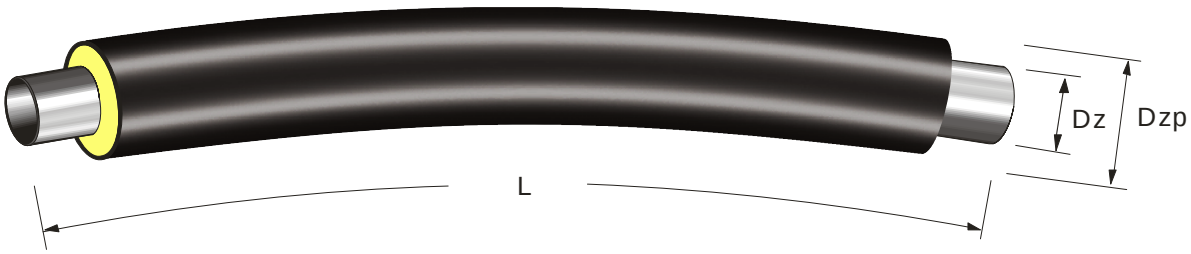

Table 2

Steel Carrier Pipe		Jacket pipe	Lenght	Weight		Catalogue reference number
Nominal diameter	External diameter	External diameter		Seamless	Welded	
DN	Dz	Dzp	L	1m	1m	
mm	*mm*	*mm*	*m*	*kg*	*kg*	
40	48,3	110	12	4,6	4,3	**RG-40/110**
50	60,3	125	12	6,7	5,7	**RG-50/125**
65	76,1	140	12	7,7	7,2	**RG-65/140**
80	88,9	160	12	10,0	9,8	**RG-80/160**
100	114,3	200	12	14,3	13,2	**RG-100/200**
125	139,7	225	12	17,5	16,2	**RG-125/225**
150	168,3	250	12	22,9	21,0	**RG-150/250**
200	219,1	315	12	40,4	31,2	**RG-200/315**
250	273,0	400	12	58,7	45,2	**RG-250/400**
300	323,9	450	12	70,1	58,6	**RG-300/450**
350	355,6	500	12	86,8	66,6	**RG-350/500**
400	406,4	560	12	108,0	83,9	**RG-400/560**
450	457,0	560	12	130,6	90,6	**RG-450/560**
500	508,0	630	12	161,3	104,2	**RG-500/630**

Note: When ordering specify steel grade (welded or seamless) and angle, bend direction. Preinsulated pipes of diameters exceeding DN 500 are manufactured if their length and filling diameter (insulation thickness) have been agreed with the customer.

Other lengths of bent pipe sections are agreed individually with the Customer.

Bend pipes are manufactured without a diffusion barrier or with a diffusion barrier agreed with the Customer.

6 Specification of Preinsulated Fittings

6.1 Elbow 90°

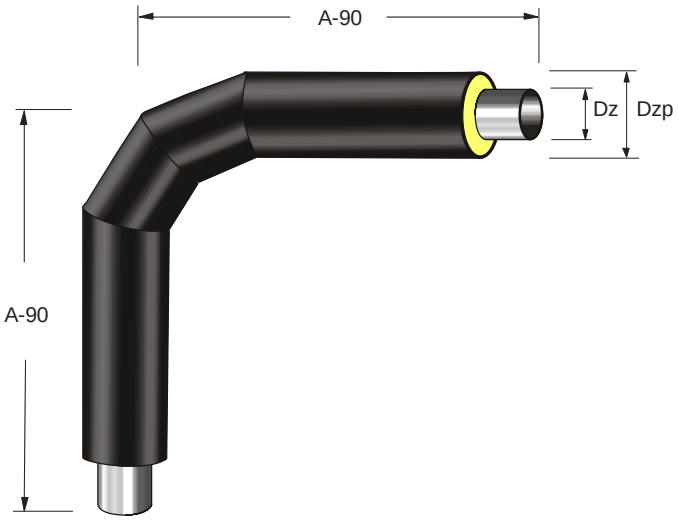

Bend radius:
Mechanical bending for:
DN 20÷80 3 × Dz
DN 100÷300 2,5 x Dz

With "Hamburg" elbows for:
DN 350÷1000 1,5 × Dz
***DN 100÷300 1,5 x Dz**
***DN 350÷1000 2,5 × Dz**

Table 3

Steel Carrier Pipe		Jacket pipr	Dimension	Weight of preinsulated elbow	Catalogue reference number
Nominal diameter	External diameter	External diameter			
DN	Dz	Dzp	A 90		
mm	*mm*	*mm*	*mm*	*1 pcs*	
20	26,9	90	1000	5,6	**K-20/90**
25	33,7	90	1000	6,4	**K-25/90**
32	42,4	110	1000	8,0	**K-32/90**
40	48,3	110	1000	10,6	**K-40/90**
50	60,3	125	1000	13,0	**K-50/90**
65	76,1	140	1000	14,5	**K-65/90**
80	88,9	160	1000	17,5	**K-80/90**
100	114,3	200	1000	27,5	**K-100/90**
125	139,7	225	1000	33,0	**K-125/90**
150	168,3	250	1000	39,0	**K-150/90**
200	219,1	315	1000	50,0	**K-200/90**
250	273,0	400	1200	82,8	**K-250/90**
300	323,9	450	1500	151,0	**K-300/90**
350	355,6	500	1500	172,0	**K-350/90**
400	406,4	560	1500	218,0	**K-400/90**
450	457,0	630	1500	284,7	**K-450/90**
500	508,0	710	1500	328,8	**K-500/90**
600	610,0	800	1500	376,0	**K-600/90**

Note: Elements with diameters above DN 600 are manufactured according to geometric dimensions agreed with the customer.
***** Bends radius are manufacturing on individual customer's request.

6.2 Elbow xx° (any angle)

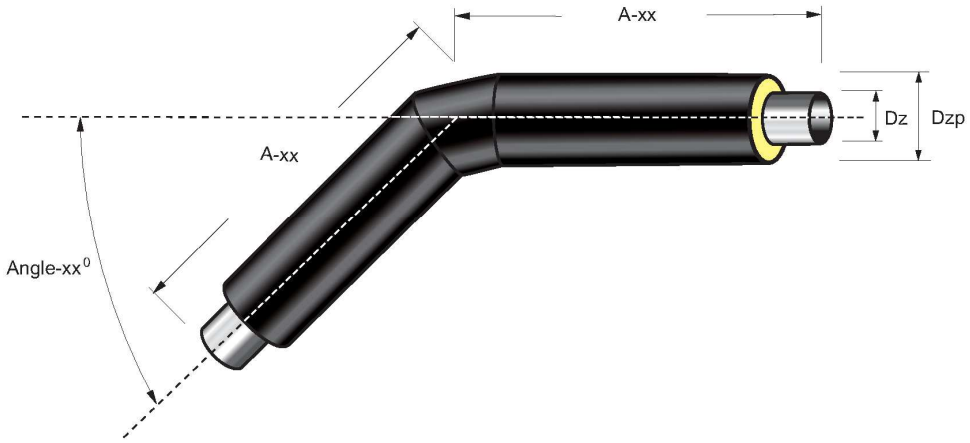

XX° means any elbow angle specified by the customer (when placing an order)
- normally performed every 15° ***(15°, 30°, 45°, 60°, 75°)***

Bend radius:
Mechanical bending for:
DN 20÷80 3 × Dz
DN 100÷300 2,5 x Dz

With "Hamburg" elbows for:
DN 350÷1000 1,5 × Dz
***DN 100÷300 1,5 x Dz**
***DN 350÷1000 2,5 × Dz**

Table 3A

Steel carrier pipe		Jacket pipe	dimension	Weight of preinsulated elbow	Catalogue reference number
Nominal diameter	External diameter	External diameter			
DN	Dz	Dzp	A xx		
mm	*mm*	*mm*	*mm*	*1 pcs*	
20	26,9	90	1000	5,6	**K-20/xx**
25	33,7	90	1000	6,4	**K-25/xx**
32	42,4	110	1000	8,0	**K-32/xx**
40	48,3	110	1000	8,5	**K-40/xx**
50	60,3	125	1000	12,0	**K-50/xx**
65	76,1	140	1000	14,5	**K-65/xx**
80	88,9	160	1000	19,5	**K-80/xx**
100	114,3	200	1000	28,5	**K-100/xx**
125	139,7	225	1000	36,5	**K-125/xx**
150	168,3	250	1000	43,5	**K-150/xx**
200	219,1	315	1000	70,5	**K-200/xx**
250	273,0	400	1200	104,4	**K-250/xx**
300	323,9	450	1500	177,0	**K-300/xx**
350	355,6	500	1500	199,0	**K-350/xx**
400	406,4	560	1500	253,0	**K-400/xx**
450	457,0	630	1500	284,7	**K-450/xx**
500	508,0	710	1500	328,8	**K-500/xx**
600	610,0	800	1500	429,0	**K-600/xx**

Note: Elements with diameters above DN 600 are manufactured according to geometric dimensions agreed with the customer.
***** Bends radius are manufacturing on individual customer's request.

6.3 Elevated tee

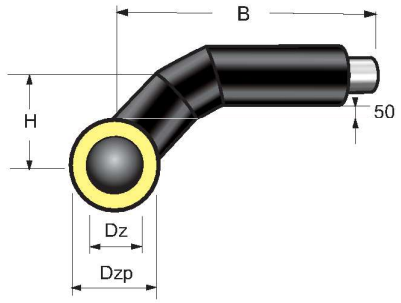

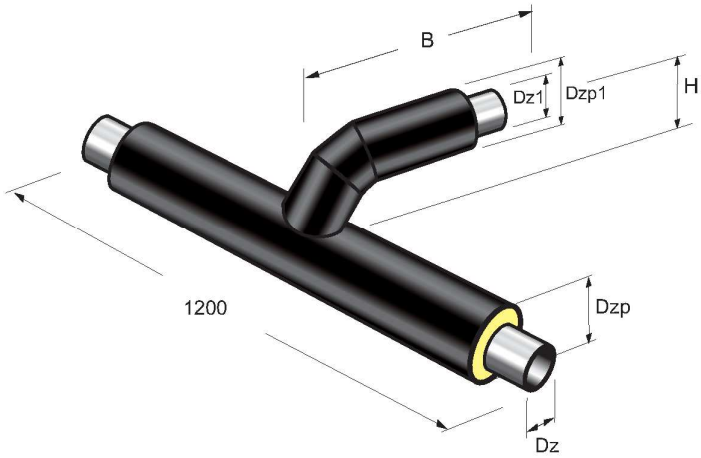

Table 4

Straight Section			Vertical section		H	B	Catalogue reference number
Nominal diameter	Carrier pipe external diameter	Jacket pipe external diameter	Carrier pipe external diameter	Jacket pipe external diameter			
DN	Dz	Dzp	Dz1	Dzp1			
mm	*mm*	*mm*	*mm*	*mm*	*mm*	*mm*	
20	26,9	90	26,9	90	140	700	**TW-20/20**
25	33,7	90	26,9	90	140	700	**TW-25/20**
32	42,4	110	33,7	90	150	700	**TW-32/25**
40	48,3	110	42,4	110	160	700	**TW-40/32**
50	60,3	125	48,3	110	170	700	**TW-50/40**
65	76,1	140	60,3	125	185	900	**TW-65/50**
80	88,9	160	76,1	140	200	900	**TW-80/65**
100	114,3	200	88,9	160	230	900	**TW-100/80**
125	139,7	225	114,3	200	265	900	**TW-125/100**
150	168,3	250	139,7	225	285	900	**TW-150/125**
200	219,1	315	168,3	250	335	900	**TW-200/150**
250	273,0	400	219,1	315	410	1100	**TW-250/200**
300	323,9	450	273,0	400	475	1100	**TW-300/250**

Note:
1. Tees are fabricated in a free selection of diameters
2. The H dimension changes along with branching off pipe diameter.
3. Elements with diameters above DN 300 are manufactured according to geometric dimensions agreed with the customer.

6.4 Reducing lateral tee

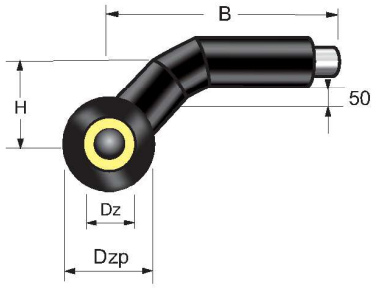

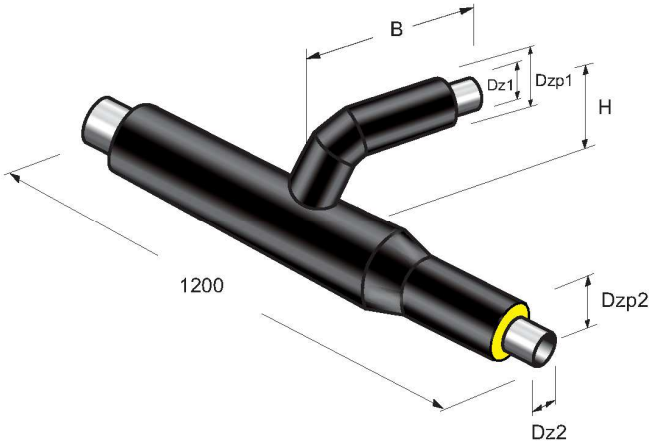

Table 5

Straight Section			Vertical section		Reduced pipe		H	B	Catalogue reference number
Nominal diameter	Carrier pipe external diameter	Jacket pipe external diameter	Carrier pipe external diameter	Jacket pipe external diameter	Carrier pipe external diameter	Jacket pipe external diameter			
DN	Dz	Dzp	Dz1	Dzp1	Dz2	Dzp2			
mm	*mm*	*mm*	*mm*	*mm*	*mm*	*mm*	*mm*	*mm*	
25	33,7	90	26,9	90	26,9	90	140	700	**TWR-25/20/20**
32	42,4	110	26,9	90	26,9	90	140	700	**TWR-32/20/20**
32	42,4	110	33,7	90	33,7	90	150	700	**TWR-32/25/25**
40	48,3	110	33,7	90	33,7	90	150	700	**TWR-40/25/25**
40	48,3	110	42,4	110	42,4	110	160	700	**TWR-40/32/32**
50	60,3	125	42,4	110	42,4	110	160	700	**TWR-50/32/32**
50	60,3	125	48,3	110	48,3	110	170	700	**TWR-50/40/40**
65	76,1	140	48,3	110	48,3	110	170	700	**TWR-65/40/40**
65	76,1	140	60,3	125	60,3	125	185	900	**TWR-65/50/50**
80	88,9	160	60,3	125	60,3	125	185	900	**TWR-80/50/50**
80	88,9	160	76,1	140	76,1	140	200	900	**TWR-80/65/65**
100	114.3	200	76,1	140	76,1	140	200	900	**TWR-100/65/65**
100	114,3	200	88,9	160	88,9	160	230	900	**TWR-100/80/80**
125	139,7	225	88,9	160	88,9	160	230	900	**TWR-125/80/80**
125	139,7	225	114,3	200	114,3	200	265	900	**TWR-125/100/100**
150	168,3	250	114,3	200	114,3	200	265	900	**TWR-150/100/100**
150	168,3	250	139,7	225	139,7	225	285	900	**TWR-150/125/125**
200	219,1	315	139,7	225	139,7	225	285	900	**TWR-200/125/125**
200	219,1	315	168,3	250	168,3	250	335	900	**TWR-200/150/150**
250	273,0	400	168,3	250	168,3	250	335	900	**TWR-250/150/150**
250	273,0	400	219,1	315	219,1	315	410	1100	**TWR-250/200/200**
300	323,9	450	219,1	315	219,1	315	475	1100	**TWR-300/200/200**
300	323,9	450	273,0	400	273,0	400	475	1100	**TWR-300/250/250**

Note:
1. Reducing tees are fabricated in a free selection of diameters
2. The H dimension changes along with branching off pipe diameter
3. Elements with diameters above DN 300 are manufactured according to geometric dimensions agreed with the customer.

6.5 Elevated Tee - Mk. 2

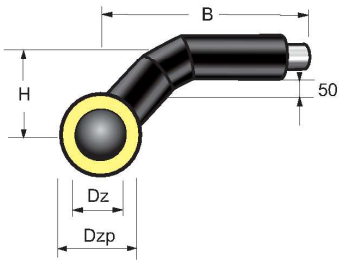

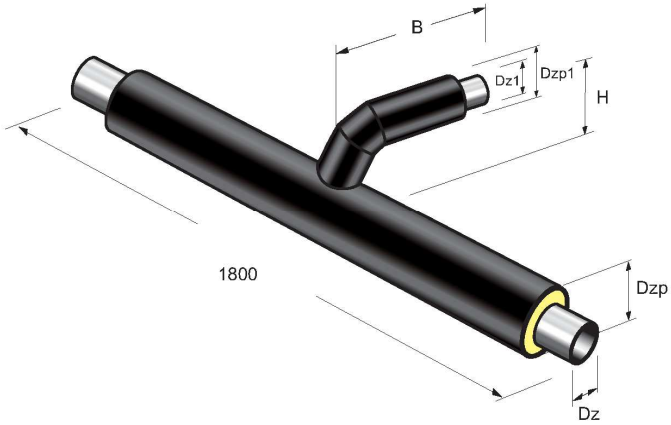

Table 6

Straight Section			Vertical section		H	B	Catalogue Reference number
Nominal diameter	Carrier pipe external diameter	Jacket pipe external diameter	Carrier pipe external diameter	Jacket pipe external diameter			
DN	Dz	Dzp	Dz1	Dzp1			
mm	*mm*	*mm*	*mm*	*mm*	*mm*	*mm*	
20	26,9	90	26,9	90	140	700	**TW2-20/20**
25	33,7	90	26,9	90	140	700	**TW2-25/20**
32	42,4	110	33,7	90	150	700	**TW2-32/25**
40	48,3	110	42,4	110	160	700	**TW2-40/32**
50	60,3	125	48,3	110	170	700	**TW2-50/40**
65	76,1	140	60,3	125	185	900	**TW2-65/50**
80	88,9	160	76,1	140	200	900	**TW2-80/65**
100	114,3	200	88,9	160	230	900	**TW2-100/80**
125	139,7	225	114,3	200	265	900	**TW2-125/100**
150	168,3	250	139,7	225	285	900	**TW2-150/125**
200	219,1	315	168,3	250	335	900	**TW2-200/150**
250	273,0	400	219,1	315	410	1100	**TW2-250/200**
300	323,9	450	273,0	400	475	1100	**TW2-300/250**
350	355,6	500	323,9	450	525	1300	**TW2-350/300**
400	406,4	560	355,6	500	580	1300	**TW2-400/350**
450	457,0	630	406,4	560	645	1500	**TW2-450/400**
500	508,0	710	457,0	630	720	1500	**TW2-500/450**
600	610,0	800	508,0	710	805	1700	**TW2-600/500**

Note:
1. Tees are fabricated in a free selection of diameters
2. They can also be fabricated as reducing tees in any diameters
3. The H dimension changes along with branching off pipe diameter
4. Elements with diameters above DN 300 are manufactured according to geometric dimensions agreed with the customer.

6.6 Strainer Tee

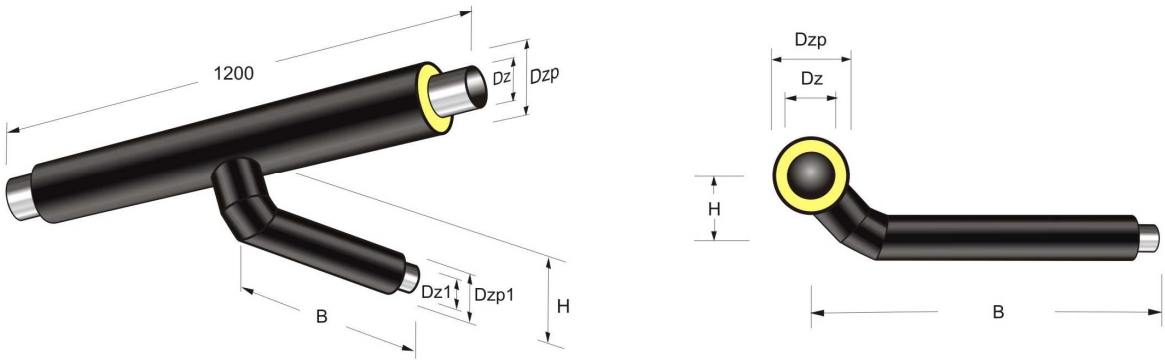

Table 7

Straight Section			Vertical section		H	B	Catalogue Reference number
Nominal diameter	Carrier pipe external diameter	Jacket pipe external diameter	Carrier pipe external diameter	Jacket pipe external diameter			
DN	Dz	Dzp	Dz1	Dzp1			
mm	*mm*	*mm*	*mm*	*mm*	*mm*	*mm*	
25	33,7	90	33,7	90	140	900	**TO-25/25**
32	42,4	110	33,7	90	150	900	**TO-32/25**
40	48,3	110	33,7	90	150	900	**TO-40/25**
50	60,3	125	33,7	90	158	900	**TO-50/25**
65	76,1	140	48,3	110	175	900	**TO-65/40**
80	88,9	160	48,3	110	185	1200	**TO-80/40**
100	114,3	200	48,3	110	205	1200	**TO-100/40**
125	139,7	225	48,3	110	218	1200	**TO-125/40**
150	168,3	250	48,3	110	230	1200	**TO-150/40**
200	219,1	315	60,3	125	270	1200	**TO-200/50**
250	273,0	400	60,3	125	313	1200	**TO-250/50**
300	323,9	450	60,3	125	340	1200	**TO-300/50**

Note:
1. Tees are fabricated in a free selection of diameters
2. They can also be fabricated as reducing tees in any diameters
3. The H dimension changes along with branching off pipe diameter
4. Elements with diameters above DN 300 are manufactured according to geometric dimensions agreed with the customer.

6.7 Strainer Tee- Mk. 2

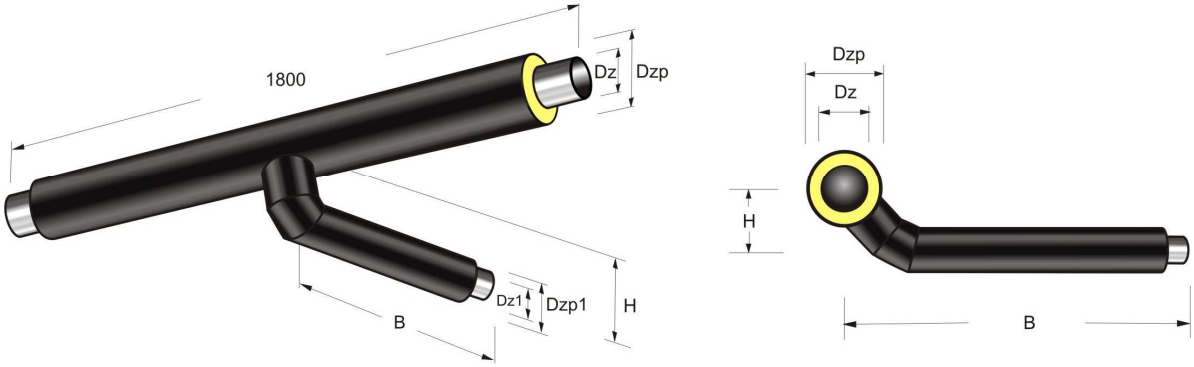

Table 8

Straight Section			Vertical section		H	B	Catalogue Reference number
Nominal diameter	Carrier pipe external diameter	Jacket pipe external diameter	Carrier pipe external diameter	Jacket pipe external diameter			
DN	Dz	Dzp	Dz1	Dzp1			
mm	*mm*	*mm*	*mm*	*mm*	*mm*	*mm*	
25	33,7	90	33,7	90	140	900	**TO2-25/25**
32	42,4	110	33,7	90	150	900	**TO2-32/25**
40	48,3	110	33,7	90	150	900	**TO2-40/25**
50	60,3	125	33,7	90	158	900	**TO2-50/25**
65	76,1	140	48,3	110	175	900	**TO2-65/40**
80	88,9	160	48,3	110	185	1200	**TO2-80/40**
100	114,3	200	48,3	110	205	1200	**TO2-100/40**
125	139,7	225	48,3	110	218	1200	**TO2-125/40**
150	168,3	250	48,3	110	230	1200	**TO2-150/40**
200	219,1	315	60,3	125	270	1200	**TO2-200/50**
250	273,0	400	60,3	125	313	1200	**TO2-250/50**
300	323,9	450	60,3	125	340	1200	**TO2-300/50**
350	355,6	500	88,9	160	380	1200	**TO2-350/80**
400	406,4	560	88,9	160	410	1200	**TO2-400/80**
450	457,0	630	114,3	200	465	1200	**TO2-450/100**
500	508,0	710	114,3	200	505	1200	**TO2-500/100**
600	610,0	800	114,3	200	550	1200	**TO2-600/100**

Note:
1. Tees are fabricated in a free selection of diameters
2. They can also be fabricated as reducing tees in any diameters
3. The H dimension changes along with branching off pipe diameter
4. Elements with diameters above DN 600 are manufactured according to geometric dimensions agreed with the customer.

6.8 Vent Tee

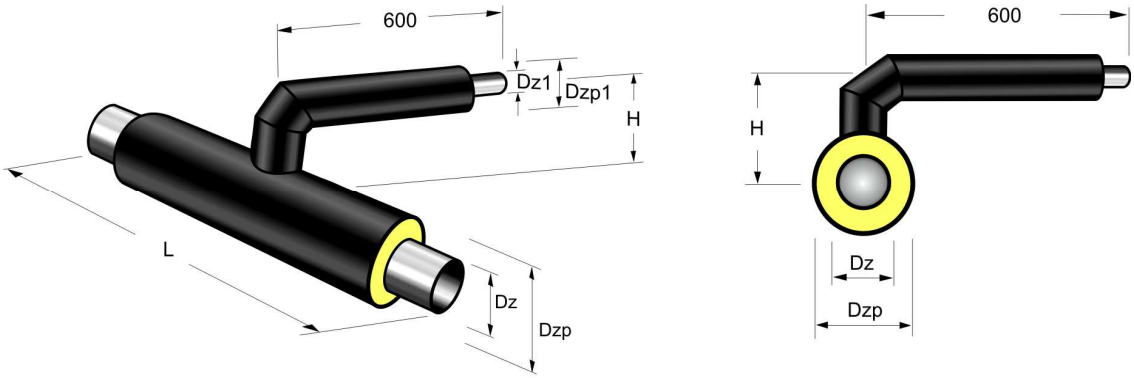

Table 9

Straight Section			Vertical section		L	H	Catalogue Reference number
Nominal diameter	Carrier pipe external diameter	Jacket pipe external diameter	Carrier pipe external diameter	Jacket pipe external diameter			
DN	Dz	Dzp	Dz1	Dzp1			
mm	*mm*	*mm*	*mm*	*mm*	*mm*	*mm*	
65	76,1	140	33,7	90	900	210	**TD-65**
80	88,9	160	33,7	90	900	220	**TD-80**
100	114,3	200	33,7	90	900	240	**TD-100**
125	139,7	225	33,7	90	900	250	**TD-125**
150	168,3	250	33,7	90	900	260	**TD-150**
200	219,1	315	33,7	90	1200	300	**TD-200**
250	273,0	400	33,7	90	1200	340	**TD-250**
300	323,9	450	33,7	90	1500	360	**TD-300**

Note:
1. Tees are fabricated in a free selection of diameters
2. They can also be fabricated as reducing tees in any diameters
3. The H dimension changes along with branching off pipe diameter
4. Elements with diameters above DN 300 are manufactured according to geometric dimensions agreed with the customer.

6.9 Vent Tee - Mk. 2

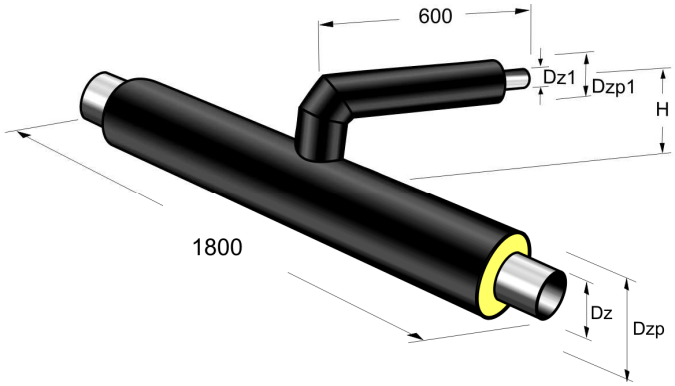

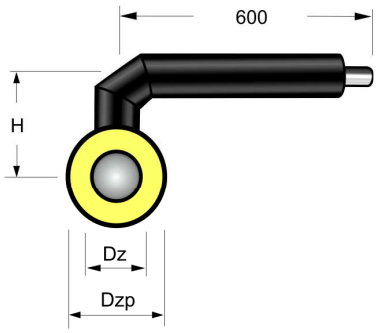

Table 10

Straight Section			Vertical section		H	Catalogue Reference number
Nominal diameter	Carrier pipe external diameter	Jacket pipe external diameter	Carrier pipe external diameter	Jacket pipe external diameter		
DN	Dz	Dzp	Dz1	Dzp1		
mm	*mm*	*mm*	*mm*	*mm*	*mm*	
65	76,1	140	33,7	90	210	**TD2-65**
80	88,9	160	33,7	90	220	**TD2-80**
100	114,3	200	33,7	90	240	**TD2-100**
125	139,7	225	33,7	90	250	**TD2-125**
150	168,3	250	33,7	90	260	**TD2-150**
200	219,1	315	33,7	90	300	**TD2-200**
250	273,0	400	33,7	90	340	**TD2-250**
300	323,9	450	33,7	90	360	**TD2-300**
350	355,6	500	48,3	110	400	**TD2-350**
400	406,4	560	48,3	110	430	**TD2-400**
450	457,0	630	48,3	110	495	**TD2-450**
500	508,0	710	48,3	110	540	**TD2-500**
600	610,0	800	48,3	110	550	**TD2-600**

Note:
1. Tees are fabricated in a free selection of diameters.
2. The H dimension changes along with branching off pipe diameter.
3. They can also be fabricated as reducing tees in any diameter.
4. Elements with diameters above DN 600 are manufactured according to geometric dimensions agreed with the customer.

6.10 Parallel Tee

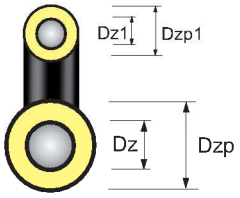

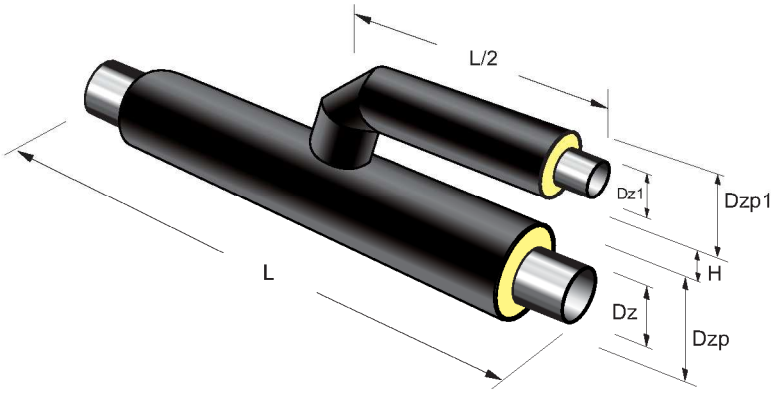

Table 11

Straight Section			Vertical section		H	L	Catalogue Reference number
Nominal diameter	Carrier pipe external diameter	Jacket pipe external diameter	Carrier pipe external diameter	Jacket pipe external diameter			
DN	Dz	Dzp	Dz1	Dzp1			
mm	*mm*	*mm*	*mm*	*mm*	*mm*	*mm*	
20	26,9	90	26,9	90	150/250*	900	**TR-20/20**
25	33,7	90	26,9	90	150/250*	900	**TR-25/20**
32	42,4	110	33,7	90	150/250*	900	**TR-32/25**
40	48,3	110	42,4	110	150/250*	900	**TR-40/32**
50	60,3	125	48,3	110	150/250*	900	**TR-50/40**
65	76,1	140	60,3	125	150/250*	1200	**TR-65/50**
80	88,9	160	76,1	140	150/250*	1200	**TR-80/65**
100	114,3	200	88,9	160	150/250*	1200	**TR-100/80**
125	139,7	225	114,3	200	150/250*	1200	**TR-125/100**
150	168,3	250	139,7	225	150/250*	1200	**TR-150/125**
200	219,1	315	168,3	250	200/300*	1500	**TR-200/150**
250	273,0	400	219,1	315	200/300*	1500	**TR-250/200**
300	323,9	450	273,0	400	250/350*	1800	**TR-300/250**

Note:
1. Tees are fabricated in a free selection of diameter.
2. The H dimension changes along with branching off pipe diameter.
3. They can also be fabricated as reducing tees in any diameters.
4. Elements with diameters above DN 300 are manufactured according to geometric dimensions agreed with the customer.

* Applies to tees with a pull-out collar on an HDPE cover.

6.11 Flat Tee

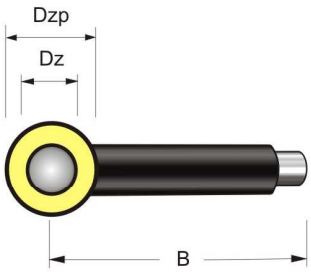

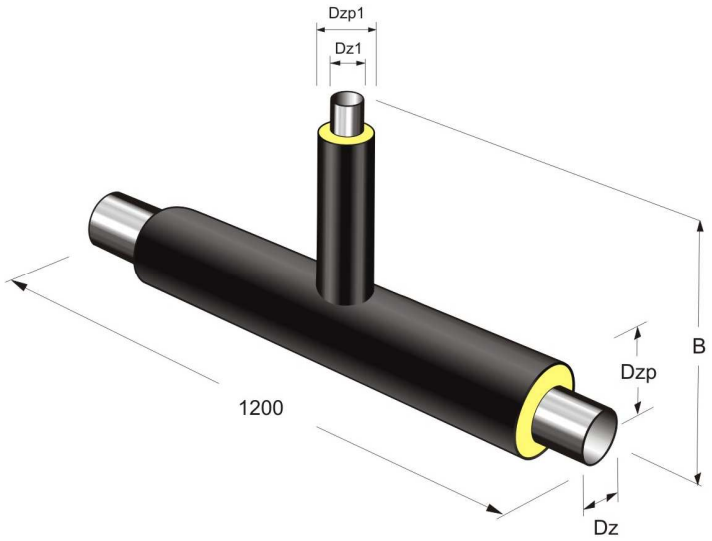

Table 12

Straight Section			Vertical section		B	Catalogue Reference number
Nominal diameter	Carrier pipe external diameter	Jacket pipe external diameter	Carrier pipe external diameter	Jacket pipe external diameter		
DN	Dz	Dzp	Dz1	Dzp1		
mm	*mm*	*mm*	*mm*	*mm*	*mm*	
20	26,9	90	26,9	90	600	**TP-20/20**
25	33,7	90	26,9	90	600	**TP-25/20**
32	42,4	110	33,7	90	600	**TP-32/25**
40	48,3	110	42,4	110	600	**TP-40/32**
50	60,3	125	48,3	110	600	**TP-50/40**
65	76,1	140	60,3	125	600	**TP-65/50**
80	88,9	160	76,1	140	600	**TP-80/65**
100	114,3	200	88,9	160	600	**TP-100/80**
125	139,7	225	114,3	200	700	**TP-125/100**
150	168,3	250	139,7	225	700	**TP-150/125**
200	219,1	315	168,3	250	700	**TP-200/150**
250	273,0	400	219,1	315	900	**TP-250/200**
300	323,9	450	273,0	400	900	**TP-300/250**

Note:
1. Tees are fabricated in a free selection of diameters.
2. They can also be fabricated as reducing tees in any diameters.
3. Elements with diameters above DN 300 are manufactured according to geometric dimensions agreed with the customer.

6.12 Flat Tee Mk.2

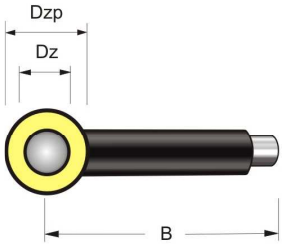

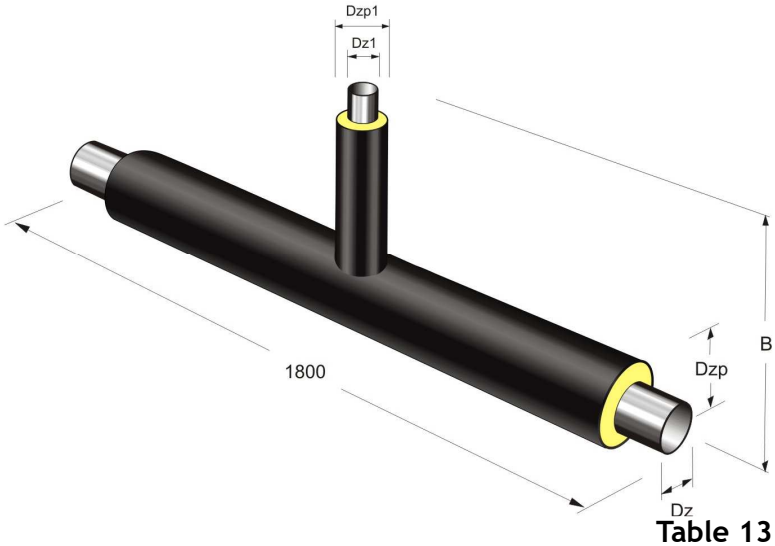

Table 13

Straight Section			Vertical section		B	Catalogue Reference number
Nominal diameter	Carrier pipe external diameter	Jacket pipe external diameter	Carrier pipe external diameter	Jacket pipe external diameter		
DN	Dz	Dzp	Dz1	Dzp1		
mm	*mm*	*mm*	*mm*	*mm*	*mm*	
20	26,9	90	26,9	90	600	**TP2-20/20**
25	33,7	90	26,9	90	600	**TP2-25/20**
32	42,4	110	33,7	90	600	**TP2-32/25**
40	48,3	110	42,4	110	600	**TP2-40/32**
50	60,3	125	48,3	110	600	**TP2-50/40**
65	76,1	140	60,3	125	600	**TP2-65/50**
80	88,9	160	76,1	140	600	**TP2-80/65**
100	114,3	200	88,9	160	600	**TP2-100/80**
125	139,7	225	114,3	200	700	**TP2-125/100**
150	168,3	250	139,7	225	700	**TP2-150/125**
200	219,1	315	168,3	250	700	**TP2-200/150**
250	273,0	400	219,1	315	900	**TP2-250/200**
300	323,9	450	273,0	400	900	**TP2-300/250**
350	355,6	500	323,9	450	900	**TP2-350/300**
400	406,4	560	355,6	500	900	**TP2-400/350**
450	457,0	630	406,4	560	1100	**TP2-450/400**
500	508,0	710	457,0	630	1100	**TP2-500/450**
600	610,0	800	508,0	710	1100	**TP2-600/500**

Note: 1. Tees are fabricated in a free selection of diameters.
2. They can also be fabricated as reducing tees in any diameters.
3. Elements with diameters above DN 600 are manufactured according to geometric dimensions agreed with the customer.

6.13 Elevated Tee for DAR-FLEX system

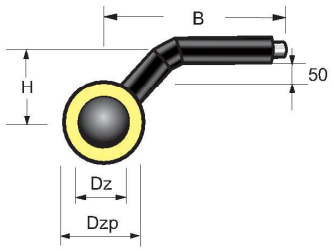

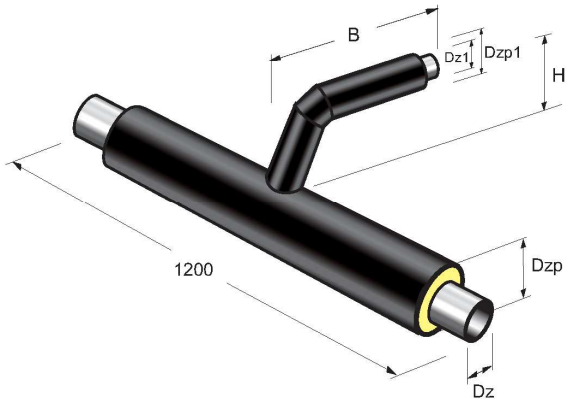

Table 14

Straight Section			Vertical section		H	B	Catalogue Reference number
Nominal diameter	Carrier pipe external diameter	Jacket pipe external diameter	Carrier pipe external diameter	Jacket pipe external diameter			
DN	Dz	Dzp	Dz1	Dzp1			
mm	*mm*	*mm*	*mm*	*mm*	*mm*	*mm*	
20	26,9	90	20	75(90)	140	700	**TW/DF-20/20**
25	33,7	90	20	75(90)	140	700	**TW/DF-25/20**
25	33,7	90	25	75(90)	140	700	**TW/DF-25/25**
25	33,7	90	28	75(90)	140	700	**TW/DF-25/28**
32	42,4	110	20	75(90)	150	700	**TW/DF-32/20**
32	42,4	110	25	75(90)	150	700	**TW/DF-32/25**
32	42,4	110	28	75(90)	150	700	**TW/DF-32/28**
40	48,3	110	20	75(90)	160	700	**TW/DF-40/20**
40	48,3	110	25	75(90)	160	700	**TW/DF-40/25**
40	48,3	110	28	75(90)	160	700	**TW/DF-40/28**
50	60,3	125	20	75(90)	170	700	**TW/DF-50/20**
50	60,3	125	25	75(90)	170	700	**TW/DF-50/25**
50	60,3	125	28	75(90)	170	700	**TW/DF-50/28**
65	76,1	140	20	75(90)	185	700	**TW/DF-65/20**
65	76,1	140	25	75(90)	185	700	**TW/DF-65/25**
65	76,1	140	28	75(90)	185	700	**TW/DF-65/28**
80	88,9	160	20	75(90)	200	700	**TW/DF-80/20**
80	88,9	160	25	75(90)	200	700	**TW/DF-80/25**
80	88,9	160	28	75(90)	200	700	**TW/DF-80/25**
100	114,3	200	20	75(90)	230	700	**TW/DF-100/20**
100	114,3	200	25	75(90)	230	700	**TW/DF-100/25**
100	114,3	200	28	75(90)	230	700	**TW/DF-100/28**
125	139,7	225	20	75(90)	265	700	**TW/DF-125/20**
125	139,7	225	25	75(90)	265	700	**TW/DF-125/25**
125	139,7	225	28	75(90)	265	700	**TW/DF-125/28**
150	168,3	250	20	75(90)	285	700	**TW/DF-150/20**
150	168,3	250	25	75(90)	285	700	**TW/DF-150/25**
150	168,3	250	28	75(90)	285	700	**TW/DF-150/28**

Note: 1. If DAR-FLEX pipes are fabricated in PLUS insulation then jacket pipe diameter is Dzp1=90 mm
2. Tees are fabricated in a free selection of diameters

6.14 Parallel Tee for DAR-FLEX system

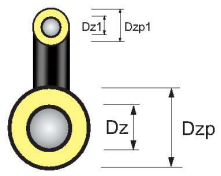

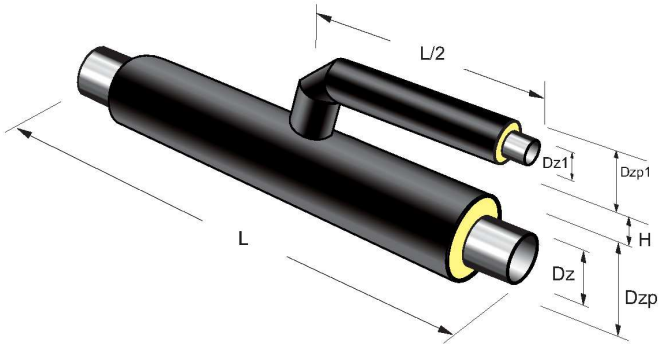

Table 15

Straight Section			Vertical section		H	B	Catalogue Reference number
Nominal diameter	Carrier pipe external diameter	Jacket pipe external diameter	Carrier pipe external diameter	Jacket pipe external diameter			
DN	Dz	Dzp	Dz1	Dzp1			
mm	*mm*	*mm*	*mm*	*mm*	*mm*	*mm*	
20	26,9	90	20	75(90)	100	900	**TR/DF-20/20**
25	33,7	90	20	75(90)	100	900	**TR/DF-25/20**
25	33,7	90	25	75(90)	100	900	**TR/DF-25/25**
25	33,7	90	28	75(90)	100	900	**TR/DF-25/28**
32	42,4	110	20	75(90)	100	900	**TR/DF-32/20**
32	42,4	110	25	75(90)	100	900	**TR/DF-32/25**
32	42,4	110	28	75(90)	100	900	**TR/DF-32/28**
40	48,3	110	20	75(90)	100	900	**TR/DF-40/20**
40	48,3	110	25	75(90)	100	900	**TR/DF-40/25**
40	48,3	110	28	75(90)	100	900	**TR/DF-40/28**
50	60,3	125	20	75(90)	100	900	**TR/DF-50/20**
50	60,3	125	25	75(90)	100	900	**TR/DF-50/25**
50	60,3	125	28	75(90)	100	900	**TR/DF-50/28**
65	76,1	140	20	75(90)	120	900	**TR/DF-65/20**
65	76,1	140	25	75(90)	120	900	**TR/DF-65/25**
65	76,1	140	28	75(90)	120	900	**TR/DF-65/28**
80	88,9	160	20	75(90)	120	900	**TR/DF-80/20**
80	88,9	160	25	75(90)	120	900	**TR/DF-80/25**
80	88,9	160	28	75(90)	120	900	**TR/DF-80/25**
100	114,3	200	20	75(90)	120	900	**TR/DF-100/20**
100	114,3	200	25	75(90)	120	900	**TR/DF-100/25**
100	114,3	200	28	75(90)	120	900	**TR/DF-100/28**
125	139,7	225	20	75(90)	150	900	**TR/DF-125/20**
125	139,7	225	25	75(90)	150	900	**TR/DF-125/25**
125	139,7	225	28	75(90)	150	900	**TR/DF-125/28**
150	168,3	250	20	75(90)	150	900	**TR/DF-150/20**
150	168,3	250	25	75(90)	150	900	**TR/DF-150/25**
150	168,3	250	28	75(90)	150	900	**TR/DF-150/28**

Note: 1. If DAR-FLEX pipes are fabricated in PLUS insulation then jacket pipe diameter is Dzp1=90 mm
2. Tees are fabricated in a free selection of diameters

6.15 Reducing pipe

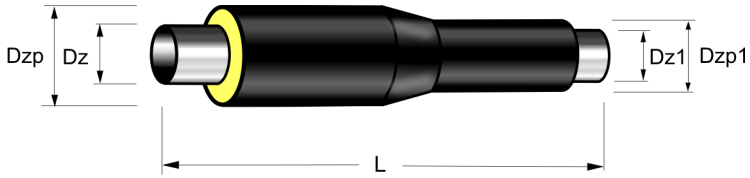

Table 16

Nominal diameter	Straight segment		Reduced segment		Lenght	Catalogue Reference number
DN/DN1	Dz	Dzp	Dz1	Dzp1	L	
mm	*mm*	*mm*	*mm*	*mm*	*mm*	
25/20	33,7	90	26,9	90	1000	**Z-25/20**
32/20	42,4	110	26,9	90	1000	**Z-32/20**
32/25	42,4	110	33,7	90	1000	**Z-32/25**
40/25	48,3	110	33,7	90	1000	**Z-40/25**
40/32	48,3	110	42,4	110	1000	**Z-40/32**
50/32	60,3	125	42,4	110	1000	**Z-50/32**
50/40	60,3	125	48,3	110	1000	**Z-50/40**
65/40	76,1	140	48,3	110	1000	**Z-65/40**
65/50	76,1	140	60,3	125	1000	**Z-65/50**
80/50	88,9	160	60,3	125	1000	**Z-80/50**
80/65	88,9	160	76,1	140	1000	**Z-80/65**
100/65	114,3	200	76,1	140	1000	**Z-100/65**
100/80	114,3	200	88,9	160	1000	**Z-100/80**
125/80	139,7	225	88,9	160	1000	**Z-125/80**
125/100	139,7	225	114,3	200	1000	**Z-125/100**
150/100	168,3	250	114,3	200	1000	**Z-150/100**
150/125	168,3	250	139,7	225	1000	**Z-150/125**
200/125	219,1	315	139,7	225	1200	**Z-200/125**
200/150	219,1	315	168,3	250	1200	**Z-200/150**
250/150	273,0	400	168,3	250	1200	**Z-250/150**
250/200	273,0	400	219,1	315	1200	**Z-250/200**
300/200	323,9	450	219,1	315	1200	**Z-300/200**
300/250	323,9	450	273,0	400	1200	**Z-300/250**
350/250	355,6	500	273,0	400	1200	**Z-350/250**
350/300	355,6	500	323,9	450	1200	**Z-350/300**
400/300	406,4	560	323,9	450	1200	**Z-400/300**
400/350	406,4	560	355,6	500	1200	**Z-400/350**
450/350	457,0	630	355,6	500	1200	**Z-450/350**
450/400	457,0	630	406,4	560	1200	**Z-450/400**
500/400	508,0	710	406,4	560	1200	**Z-500/400**
500/450	508,0	710	457,0	630	1200	**Z-500/450**
600/450	610,0	800	457,0	630	1200	**Z-600/450**
600/500	610,0	800	508,0	710	1200	**Z-600/500**

Note:
1. Reducing pipes are fabricated in a free selection of diameters
2. Elements with diameters above DN 600 are manufactured according to geometric dimensions agreed with the customer.

6.16 Transition Fittings

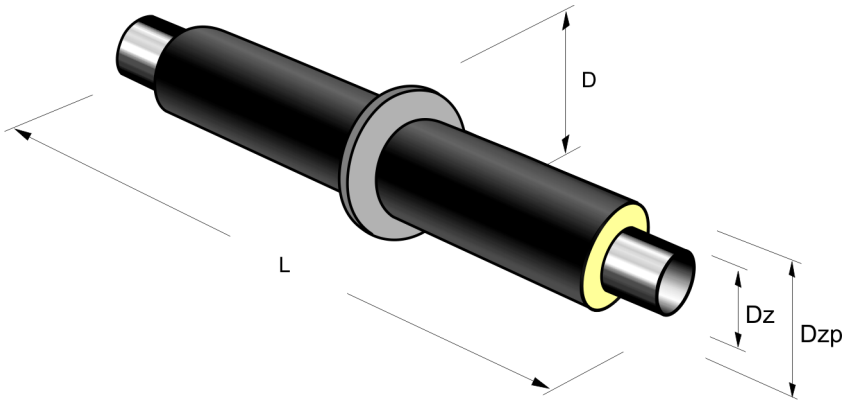

Table 17

Nominal diameter	Carrier pipe external diameter	Jacket pipe external diameter	Lenght	External flange diameter	Catalogue Reference number
DN	Dz	Dzp	L	D	
mm	*mm*	*mm*	*mm*	*mm*	
20	26,9	90	2000	140	**PS-20**
25	33,7	90	2000	140	**PS-25**
32	42,4	110	2000	140	**PS-32**
40	48,3	110	2000	140	**PS-40**
50	60,3	125	2000	170	**PS-50**
65	76,1	140	2000	200	**PS-65**
80	88,9	160	2000	220	**PS-80**
100	114,3	200	2500	260	**PS-100**
125	139,7	225	2500	300	**PS-125**
150	168,3	250	2500	320	**PS-150**
200	219,1	315	2500	400	**PS-200**
250	273,0	400	2500	500	**PS-250**
300	323,9	450	2500	560	**PS-300**

Note:
1. Elements with diameters above DN 300 are manufactured according to geometric dimensions agreed with the customer..
2. Fixed point concrete block diameters are specified in the Manual “Static and Designed Calculations”, see p. 30.

6.17 Wall Mounted Fixed Point

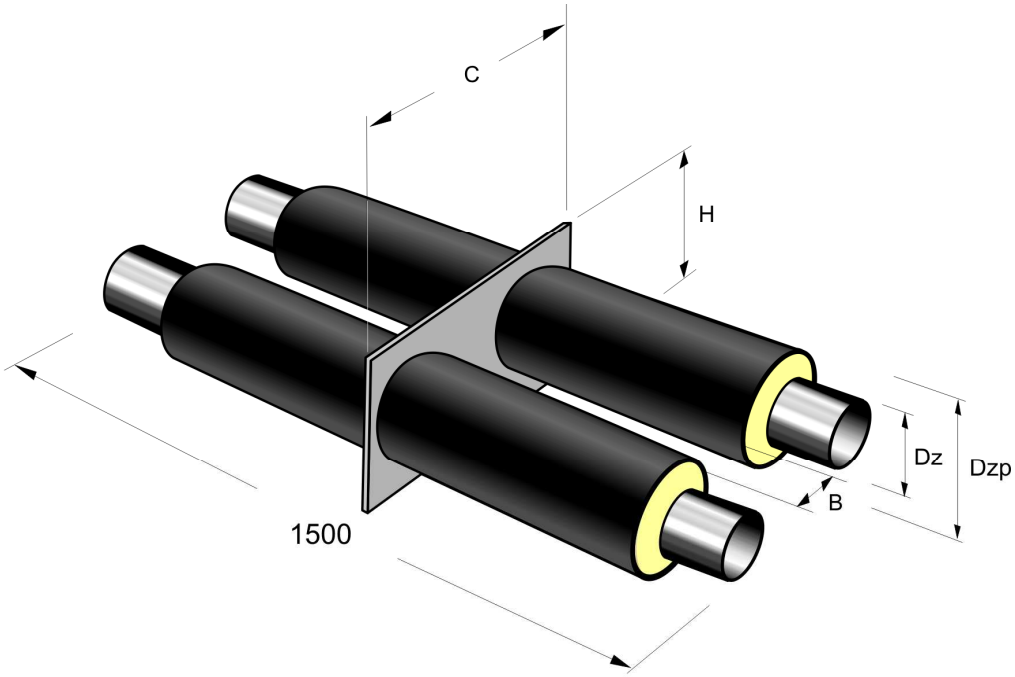

Table 18

Nominal diameter	Carrier pipe external diameter	Jacket pipe external diameter	H	B	c	Catalogue Reference number
DN	Dz	Dzp				
mm	*mm*	*mm*	*mm*	*mm*	*mm*	
20	26,9	90	110	150	350	**PSW-20**
25	33,7	90	110	150	350	**PSW-25**
32	42,4	110	130	150	390	**PSW-32**
40	48,3	110	130	150	390	**PSW-40**
50	60,3	125	145	150	420	**PSW-50**
65	76,1	140	160	150	450	**PSW-65**
80	88,9	160	180	150	490	**PSW-80**
100	114,3	200	220	150	570	**PSW-100**
125	139,7	225	245	150	620	**PSW-125**
150	168,3	250	270	150	670	**PSW-150**
200	219,1	315	335	150	800	**PSW-200**
250	273,0	400	440	200	1010	**PSW-250**
300	323,9	450	490	200	1140	**PSW-300**

Note: Elements with diameters above DN 300 are manufactured according to geometric dimensions agreed with the customer.
This sheet also applies to fixed points marked with the "PSS" symbol.

6.18 Angle fixed point xx°

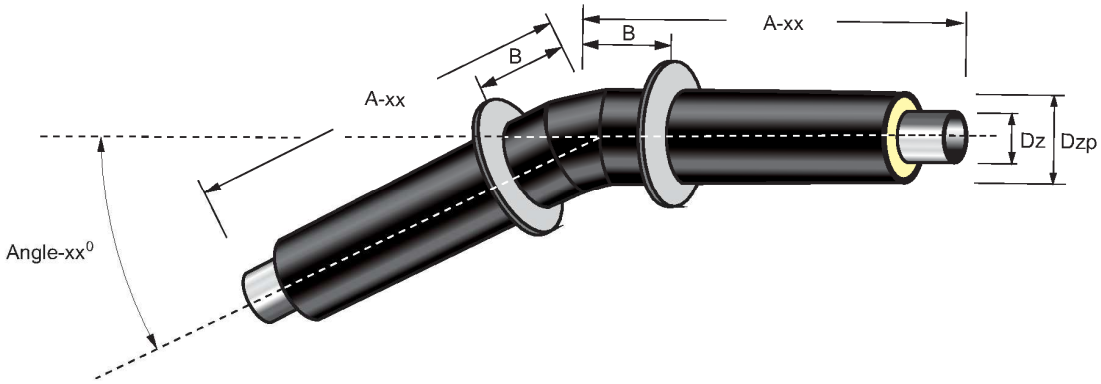

XX° means any angle specified by the customer (when placing an order) - standard 15° or 30°

Bend radius:
Mechanical bending for:
DN 20÷80 3 × Dz
DN 100÷300 2,5 x Dz

With "Hamburg" elbows for::
DN 350÷1000 1,5 × Dz

Table 19

Nominal diameter	Carrier pipe external diameter	Jacket pipe external diameter	Lenght	Diameter	Distance	Catalogue Reference number
DN	Dz	Dzp	A-xx	D	B	
mm	*mm*	*mm*	*mm*	*mm*	*mm*	
20	26,9	90	1000	140	230	**PSK-20/xx**
25	33,7	90	1000	140	230	**PSK-25/xx**
32	42,4	110	1000	140	230	**PSK-32/xx**
40	48,3	110	1000	140	240	**PSK-40/xx**
50	60,3	125	1000	170	250	**PSK-50/xx**
65	76,1	140	1000	200	260	**PSK-65/xx**
80	88,9	160	1500	220	270	**PSK -80/xx**
100	114,3	200	1500	260	270	**PSK-100/xx**
125	139,7	225	1500	300	270	**PSK-125/xx**
150	168,3	250	1500	320	270	**PSK-150/xx**
200	219,1	315	1500	400	380	**PSK-200/xx**
250	273,0	400	1500	500	400	**PSK-250/xx**
300	323,9	450	2000	560	420	**PSK-300/xx**

Note: Elements with diameters above DN 300 are manufactured according to geometric dimensions agreed with the customer.

6.19 Single bellow longitudinal compensator operating under a nominal pressure of 1.6 MPa

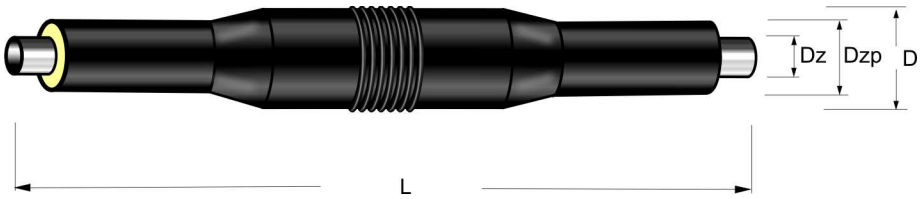

Table 20

Nominal diameter	Carrier pipe external diameter	Jacket pipe external diameter	Diameter	Lenght	Compensation increment	Catalogue Reference number
DN	Dz	Dzp	D	L	ΔL_k	
mm	*mm*	*mm*	*mm*	*mm*	*mm*	
40	48,3	110	160	2000	100	**KP-40-100/1,6**
50	60,3	125	200	2000	100	**KP-50-100/1,6**
65	76,1	140	200	2000	100	**KP-65-100/1,6**
80	88,9	160	225	2000	100	**KP-80-100/1,6**
80	88,9	160	225	2000	150	**KP-80-150/1,6**
100	114,3	200	250	2500	125	**KP-100-125/1,6**
100	114,3	200	250	2500	155	**KP-100-155/1,6**
125	139,7	225	315	2500	125	**KP-125-125/1,6**
125	139.7	225	315	2500	160	**KP-125-160**/1,6
150	168,3	250	400	2500	125	**KP-150-125/1,6**
150	168,3	250	400	2500	165	**KP-150-165/1,6**
200	219,1	315	450	2500	125	**KP-200-125/1,6**
200	219,1	315	450	2500	170	**KP-200-170/1,6**
250	273,0	400	500	2500	125	**KP-250-125/1,6**
250	273,0	400	500	2500	170	**KP-250-170/1,6**
300	323,9	450	560	2500	125	**KP-300-125/1,6**
300	323,9	450	560	2500	190	**KP-300-190/1,6**
350	355,6	500	630	3000	125	**KP-350-125/1,6**
350	355,6	500	630	3000	190	**KP-350-190/1,6**
400	406,4	560	710	3000	125	**KP-400-125/1,6**
400	406,4	560	710	3000	200	**KP-400-200/1,6**
450	457,0	630	710	3000	125	**KP-450-125/1,6**
450	457,0	630	710	3000	200	**KP-450-200/1,6**
500	508,0	710	800	3000	125	**KP-500-125/1,6**
500	508,0	710	800	3000	200	**KP-500-200/1,6**
600	610,0	800	900	3000	125	**KP-600-125/1,6**
600	610,0	800	900	3000	200	**KP-600-200/1,6**

Note: Elements with diameters above DN 600 are manufactured according to geometric dimensions agreed with the customer.

6.20 Single bellow longitudinal compensator operating under a nominal pressure of 2.5 MPa

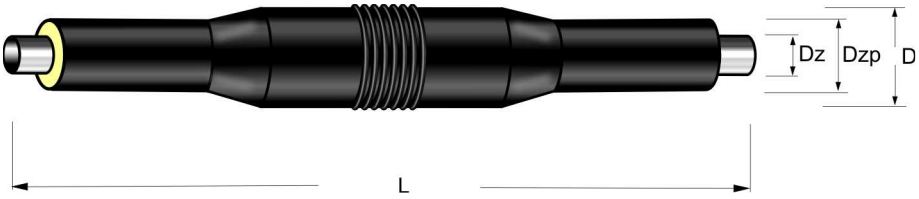

Table 21

Nominal diameter	Carrier pipe external diameter	Jacket pipe external diameter	Diamater	Lenght	Compensation increment	Catalogue Reference number
DN	Dz	Dzp	D	L	ΔL_k	
mm	*mm*	*mm*	*mm*	*mm*	*mm*	
80	88,9	160	225	2000	90*	**KP-80-90/2,5**
100	114,3	200	250	2500	90*	**KP-100-90/2,5**
125	139,7	225	315	2500	90*	**KP-125-90/2,5**
150	168,3	250	315	2500	90*	**KP-150-90/2,5**
200	219,1	315	450	2500	90*	**KP-200-90/2,5**
250	273,0	400	500	2500	90*	**KP-250-90/2,5**
300	323,9	450	560	2500	90*	**KP-300-90/2,5**
350	355,6	500	630	3000	90*	**KP-350-90/2,5**
400	406,4	560	710	3000	90*	**KP-400-90/2,5**
450	457,0	560	710	3000	90*	**KP-450-90/2,5**
500	508,0	630	800	3000	90*	**KP-500-90/2,5**
600	610,0	800	900	3000	90*	**KP-600-90/2,5**

Note: Elements with diameters above DN 600 are manufactured according to geometric dimensions agreed with the customer.
* Compensators can also be made with a compensation increment of 180 mm.

7 Preinsulated Steel Fittings- Valves

7.1 Shutoff Ball Valve

A preinsulated shutoff ball valve is supplied together with its fittings, which comprise: a wrench to open and shutoff the valve, a street box and a jacket pipe connecting the spindle and street box

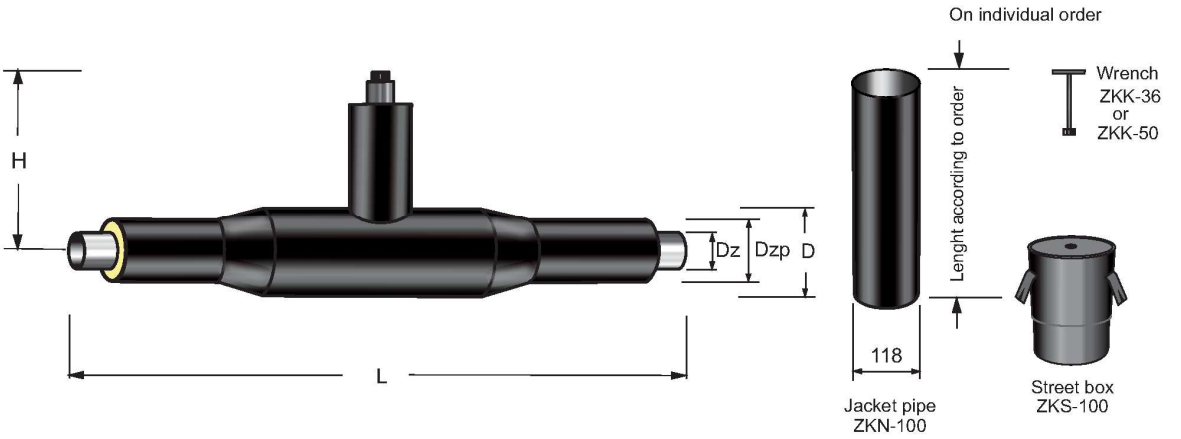

Table 22

Straight pipe			D	H	L	Catalogue Reference number
Nominal diameter	Carrier pipe external diameter	Jacket pipe external diameter				
DN	Dz	Dzp				
mm	*mm*	*mm*	*mm*	*mm*	*mm*	
20	26,9	90	110	380	1500	**ZK-20**
25	33,7	90	110	382	1500	**ZK-25**
32	42,4	110	110	386	1500	**ZK-32**
40	48,3	110	125	400	1500	**ZK-40**
50	60,3	125	140	406	1500	**ZK-50**
65	76,1	140	160	415	1500	**ZK-65**
80	88,9	160	200	425	1500	**ZK-80**
100	114,3	200	225	449	1500	**ZK-100**
125	139,7	225	250	454	1500	**ZK-125**
150	168,3	250	315	475	1500	**ZK-150**
200	219,1	315	400	515	1800	**ZK-200**
250	273,0	400	450	557	1800	**ZK-250**
300	323,9	450	560	610	1800	**ZK-300**

Note: As standard, cut-off valves with reduced flow are produced, for a working pressure of min. 1.6 Mpa
At the Customer's request, valves with other parameters indicated in the order are produced (e.g. full-flow valves, for a working pressure of 2.5 MPa, etc.)
Elements with diameters above DN 300 are produced according to geometric dimensions agreed with the Customer.
The table provides the minimum dimension H, which may vary depending on the type of cut-off valve used (e.g. reduced flow, full-flow, etc.) and depending on the supplier of the steel valve and the Customer's requirements.
Shut-off valves are supplied without jacket pipe, wrench and street box. Accessories are available on individual request.

7.2 Vent ball valve

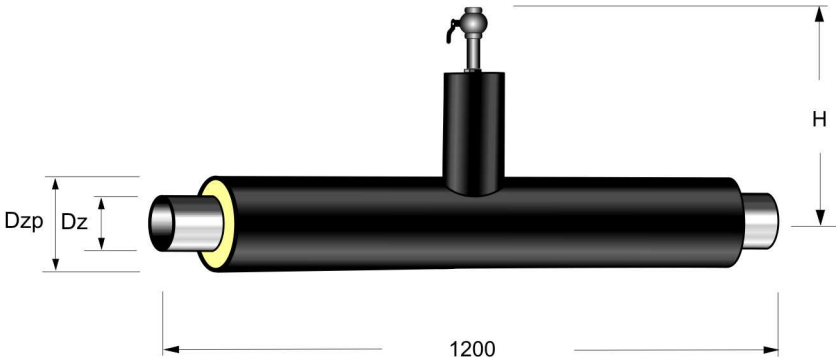

Table 23

Straight pipe			Diameter of vent valve	H	Catalogue Reference number
Nominal diameter	Carrier pipe external diameter	Jacket pipe external diameter			
DN	Dz	Dzp			
mm	*mm*	*mm*	*mm*	*mm*	
25	33,7	90	33,7	384	**ZD-25**
32	42,4	110	33,7	388	**ZD-32**
40	48,3	110	33,7	403	**ZD-40**
50	60,3	125	33,7	410	**ZD-50**
65	76,1	140	33,7	414	**ZD-65**
80	88,9	160	33,7	427	**ZD-80**
100	114,3	200	33,7	450	**ZD-100**
125	139,7	225	33,7	455	**ZD-125**
150	168,3	250	33,7	457	**ZD-150**
200	219,1	315	33,7	515	**ZD-200**
250	273,0	400	33,7	560	**ZD-250**
300	323,9	450	33,7	756	**ZD-300**

Note: Stainless steel vent valves with a threaded end.
Elements with diameters above DN 300 are produced according to geometric dimensions agreed with the Customer.

7.3 Strain Ball Valve

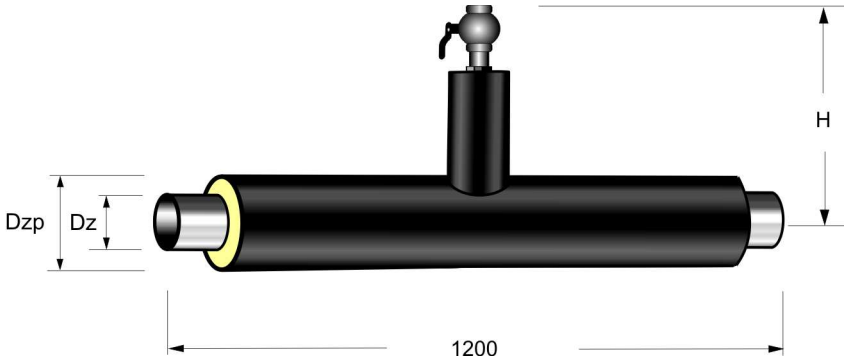

Table 24

Straight pipe			Diameter of strain valve	H	Catalogue Reference number
Nominal diameter	Carrier pipe external diameter	Jacket pipe external diameter			
DN	Dz	Dzp			
mm	*mm*	*mm*	*mm*	*mm*	
40	48,3	110	48,3	403	**ZO-40**
50	60,3	125	48,3	410	**ZO-50**
65	76,1	140	48,3	414	**ZO-65**
80	88,9	160	48,3	427	**ZO-80**
100	114,3	200	48,3	450	**ZO-100**
125	139,7	225	48,3	455	**ZO-125**
150	168,3	250	48,3	457	**ZO-150**
200	219,1	315	60,3	515	**ZO-200**
250	273,0	400	60,3	560	**ZO-250**
300	323,9	450	60,3	756	**ZO-300**

Note: Stainless steel vent valves with a threaded end.
Elements with diameters above DN 300 are produced according to geometric dimensions agreed with the Customer.

7.4 Shutoff ball valve and vent valve assembly

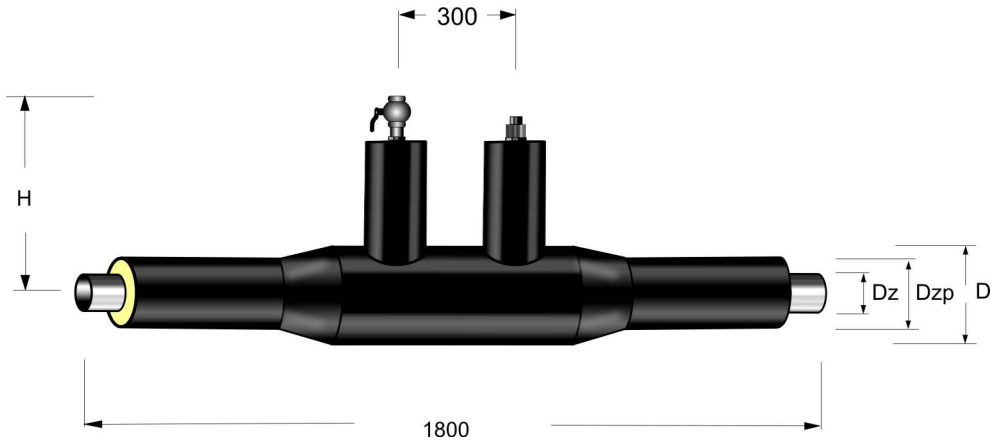

Table 25

Straight pipe			D	H	Catalogue Reference Number
Nominal diameter	Carrier pipe external diameter	Jacket pipe external diameter			
DN	Dz	Dzp			
mm	*mm*	*mm*	*mm*	*mm*	
32	42,4	110	110	388	**ZKD-32**
40	48,3	110	125	403	**ZKD-40**
50	60,3	125	140	410	**ZKD-50**
65	76,1	140	160	414	**ZKD-65**
80	88,9	160	200	427	**ZKD-80**
100	1143	200	225	450	**ZKD-100**
125	139,7	225	250	455	**ZKD-125**
150	168,3	250	315	457	**ZKD-150**
200	219,1	315	400	515	**ZKD-200**
250	273,0	400	450	560	**ZKD-250**
300	323,9	450	560	756	**ZKD-300**

Vent valve diameter::
For pipe of nominal diameters up to300 mm 33,7 mm
For pipe of nominal diameters above 300 mm 48,3 mm

Note: Vent valve made of stainless steel with a threaded end.
Elements with diameters above DN 300 are manufactured according to geometric dimensions agreed with the customer.
As standard, cut-off valves with reduced flow are produced, for a working pressure of min. 1.6 MPa.
At the customer's request, valves with other parameters indicated in the order are manufactured (e.g. full-flow valves, for a working pressure of 2.5 MPa, etc.).
The table provides the minimum dimension H, which may vary depending on the type of cut-off valve used (e.g. reduced flow, full-flow, etc.) and depending on the supplier of the steel valve and the customer's requirements.

7.5 Single strain valve shutoff ball valve

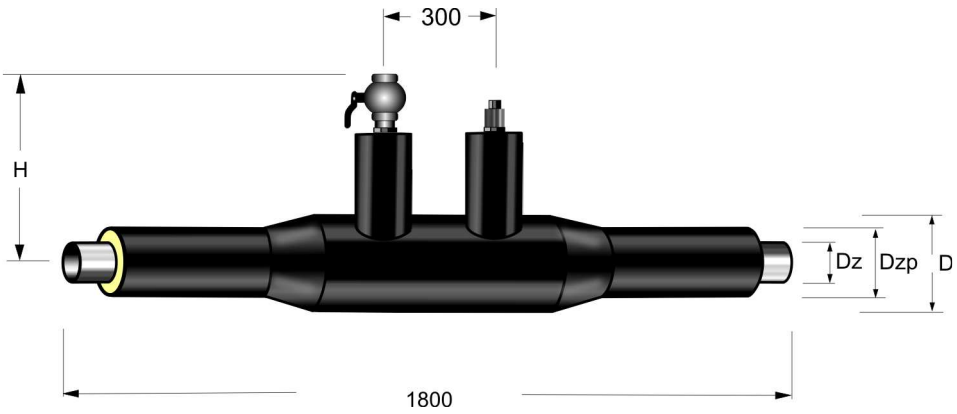

Table 26

Straight pipe			D	H	Catalogue Reference Number
Nominal diameter	Carrier pipe external diameter	Jacket pipe external diameter			
DN	Dz	Dzp			
mm	*mm*	*mm*	*mm*	*mm*	
40	48,3	110	125	400	**ZKO-40**
50	60,3	125	140	406	**ZKO-50**
65	76,1	140	160	415	**ZKO-65**
80	88,9	160	200	425	**ZKO-80**
100	114,3	200	225	449	**ZKO-100**
125	139,7	225	250	454	**ZKO-125**
150	168,3	250	315	475	**ZKO-150**
200	219,1	315	400	515	**ZKO-200**
250	273,0	400	450	557	**ZKO-250**
300	323,9	450	560	610	**ZKO-300**

Strain valve diameter:

For pipe	up to DN 150 mm	**48,3 mm**
	from DN 200 to DN 300 mm	**60,3 mm**
	from DN 350 to DN 400 mm	**88,9 mm**
	above DN 400 mm	**114,3 mm**

Note: Strain valve made of stainless steel with a threaded end.
Elements with diameters above DN 300 are manufactured according to geometric dimensions agreed with the customer.
As standard, cut-off valves with reduced flow are produced, for a working pressure of min. 1.6 MPa.
At the customer's request, valves with other parameters indicated in the order are manufactured (e.g. full-flow valves, for a working pressure of 2.5 MPa, etc.).
The table provides the minimum dimension H, which may vary depending on the type of cut-off valve used (e.g. reduced flow, full-flow, etc.) and depending on the supplier of the steel valve and the customer's requirements.

7.6 Strain and vent shutoff ball valve

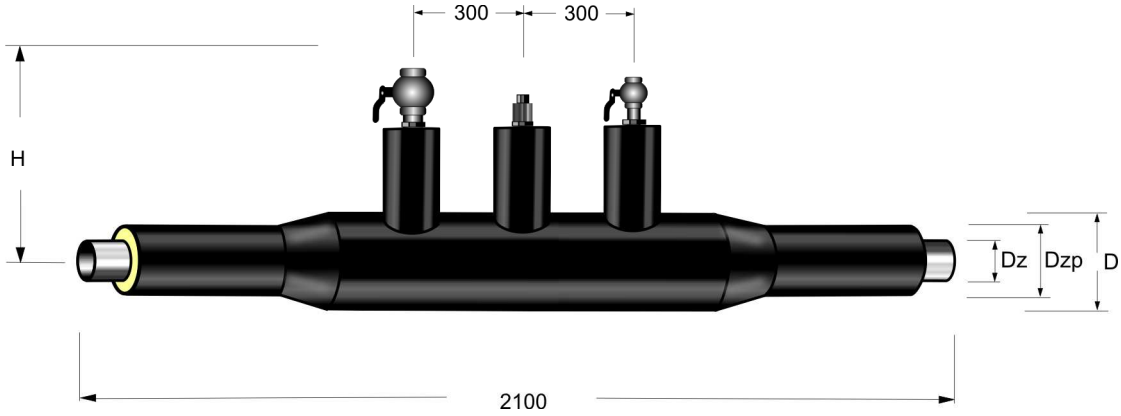

Table 27

Straight pipe			D	H	Catalogue Reference Number
Nominal diameter	Carrier pipe external diameter	Jacket pipe external diameter			
DN	Dz	Dzp			
mm	*mm*	*mm*	*mm*	*mm*	
40	48,3	110	125	400	**ZKOD-40**
50	60,3	125	140	406	**ZKOD-50**
65	76,1	140	160	415	**ZKOD-65**
80	88,9	160	200	425	**ZKOD-80**
100	114,3	200	225	449	**ZKOD-100**
125	139,7	225	250	454	**ZKOD-125**
150	168,3	250	315	475	**ZKOD-150**
200	219,1	315	400	515	**ZKOD-200**
250	273,0	400	450	557	**ZKOD-250**
300	323,9	450	560	610	**ZKOD-300**

Valve diameter:	Strain / Vent
For pipe of nominal diameter:	
up to DN 150 mm	**33,7 mm / 48,3 mm**
from DN 200 to DN 300 mm	**33,7 mm / 60,3 mm**
from DN 350 to DN 400 mm	**48,3 mm / 88,9 mm**
above DN 400 mm	**48,3 mm / 114,3 mm**

Note: Vent/strain valve made of stainless steel with a threaded end.
Elements with diameters above DN 300 are manufactured according to geometric dimensions agreed with the customer.
As standard, cut-off valves with reduced flow are produced, for a working pressure of min. 1.6 MPa.
At the customer's request, valves with other parameters indicated in the order are manufactured (e.g. full-flow valves, for a working pressure of 2.5 MPa, etc.).
The table provides the minimum dimension H, which may vary depending on the type of cut-off valve used (e.g. reduced flow, full-flow, etc.) and depending on the supplier of the steel valve and the customer's requirements.

8 Coupling Unit

8.1 Common coupling N

(HPDE sleeve sealed with heat shrinkable tape).

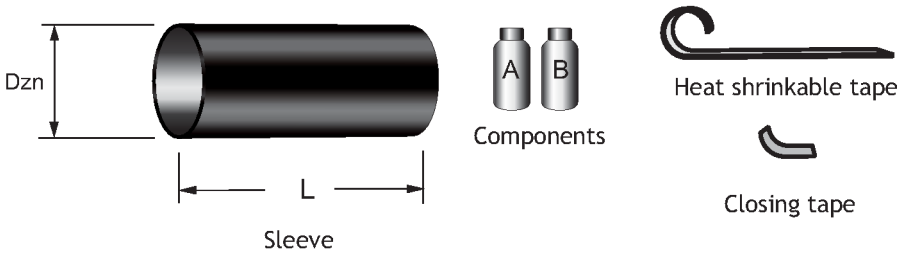

Table 28

Nominal diameter	Carrier pipe external diameter	Sleeve external diameter	Lenght	Components		Heat shrinkable tape	Closing tape	Catalogue Reference Number
DN	Dzp	Dzn	L	A	B			
mm	*mm*	*mm*	*mm*	*g*	*g*	*cm*	*cm*	
20	90	100	600	100	169	83	30	**N-20/100**
25	90	100	600	85	143	83	30	**N-25/100**
32	110	121	600	126	212	95	30	**N-32/120**
40	110	121	600	120	201	95	30	**N-40/120**
50	125	136	600	147	247	105	30	**N-50/135**
65	140	153	600	170	285	114	30	**N-65/150**
80	160	174	600	218	366	129	30	**N-80/173**
100	200	216	600	331	557	155	30	**N-100/214**
125	225	243	600	384	645	171	30	**N-125/240**
150	250	269	600	423	711	187	30	**N-150/265**
200	315	338	600	636	1068	233	45	**N-200/333**
250	400	428	700	1402	2357	288	45	**N-250/420**
300	450	472	700	1607	2701	320	45	**N-300/472**

Table 28a

Insulation ***PLUS***

DN	Dzp	Dzn	L	A	B	Heat shrinkable tape	Closing tape	Catalogue Reference Number
mm	*mm*	*mm*	*mm*	*g*	*g*	*cm*	*cm*	
20	110	121	600	154	259	95	30	**N-20/120**
25	110	121	600	134	225	95	30	**N-25/120**
32	125	136	600	169	284	105	30	**N-32/135**
40	125	136	600	163	273	105	30	**N-40/135**
50	140	153	600	195	328	114	30	**N-50/150**
65	160	174	600	243	408	129	30	**N-65/173**
80	200	216	600	393	661	155	30	**N-80/214**
100	225	243	600	461	775	171	30	**N-100/240**
125	250	269	600	528	888	187	30	**N-125/265**
150	315	338	600	871	1463	233	45	**N-150/333**
200	355	380	600	1376	2313	288	45	**N-200/380**
250	450	472	700	2087	3509	320	45	**N-250/472**

Note: at the customer's request, the N-type connector sets can be delivered with heat shrinkable bands according to catalog no. 8.2.1
Oval - not tolerated.
* The table shows the minimum outer diameters of the sleeves.

8.2 Heat shrinkable couplings

8.2.1 Heat shrinkable coupling NT

(HPDE sleeve sealed with heat shrinkable band)

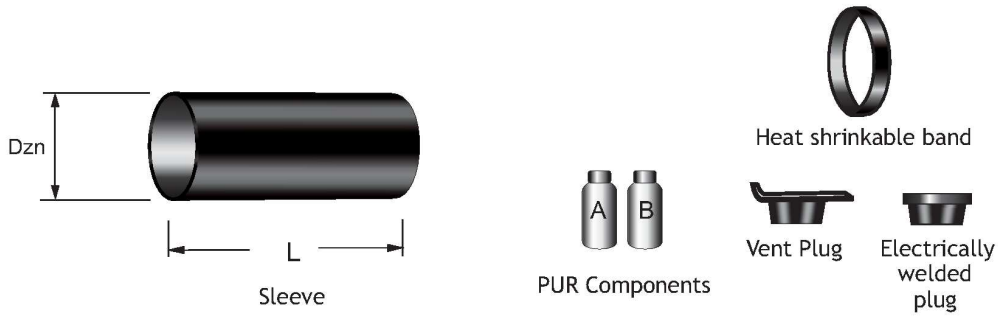

Table 29

Nominal diameter	Carrier pipe external diameter	Sleeve external diameter	Lenght	Components		Heat shrin-kable tape	Vent plug and electrically welded plug	Catalogue Reference Number
DN	Dzp	Dzn	L	A	B			
mm	*mm*	*mm*	*mm*	*g*	*g*	*szt*	*kpl*	
20	90	107	600	100	169	2	2	**NT-20/107**
25	90	107	600	97	163	2	2	**NT-25/107**
32	110	129	600	145	243	2	2	**NT-32/129**
40	110	129	600	140	236	2	2	**NT-40/129**
50	125	143	600	163	274	2	2	**NT-50/143**
65	140	156	600	196	330	2	2	**NT-65/156**
80	160	178	600	241	405	2	2	**NT-80/178**
100	200	224	600	373	627	2	2	**NT-100/224**
125	225	255	600	425	714	2	2	**NT-125/255**
150	250	278	600	447	752	2	2	**NT-150/278**
200	315	341	600	706	1186	2	2	**NT-200/341**
250	400	430	700	1402	2356	2	2	**NT-250/430**
300	450	480	700	1596	2683	2	2	**NT-300/480**

Table 29a

Insulation ***PLUS***

DN	Dzp	Dzn	L	A	B	Heat shrinkable tape	Vent plug and electrically welded plug	Catalogue Reference Number
mm	*mm*	*mm*	*mm*	*g*	*g*	*szt*	*kpl*	
20	110	129	600	154	259	2	2	**NT-20/129**
25	110	129	600	151	253	2	2	**NT-25/129**
32	125	143	600	179	300	2	2	**NT-32/143**
40	125	143	600	174	292	2	2	**NT-40/143**
50	140	156	600	215	361	2	2	**NT-50/156**
65	160	178	600	259	436	2	2	**NT-65/178**
80	200	224	600	417	702	2	2	**NT-80/224**
100	225	255	600	480	807	2	2	**NT-100/255**
125	250	278	600	525	883	2	2	**NT-125/278**
150	315	341	600	884	1486	2	2	**NT-150/341**
200	355	383	600	1340	2253	2	2	**NT-200/383**
250	450	480	700	1948	3275	2	2	**NT-250/480**

Note: At the customer's request, the sets of NT connectors can also be delivered with heat-shrinkable and closing tape according to catalog card no. 8.1
Oval - not tolerated.
* The table shows the minimum outer diameters of the sleeves.
We also manufacture larger sleeve diameters than those given in the tables above.

8.2.2 Radiation crosslinked heat shrinkable coupling - NTX+M

(Heat shrinkable PeXc sleeve)

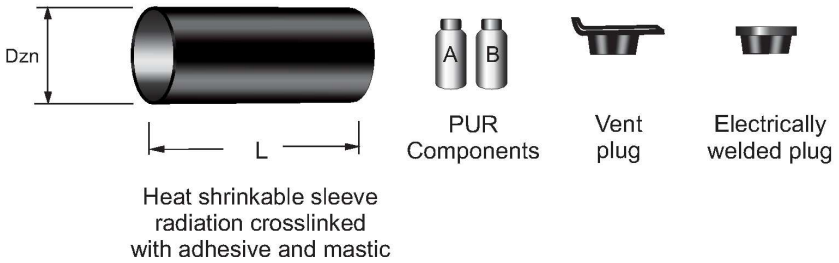

Table 30

Nominal diameter	Carrier pipe external diameter	Sleeve external diameter	Lenght	Components		Vent plug and electrically welded plug	Catalogue Reference Number
DN	Dzp	Dzn	L	A	B		
mm	*mm*	*mm*	*mm*	*g*	*g*	*kpl*	
20	90	107	600	100	169	2	**NTX+M-20/107**
25	90	107	600	97	163	2	**NTX+M-25/107**
32	110	129	600	145	243	2	**NTX+M-32/129**
40	110	129	600	140	236	2	**NTX+M-40/129**
50	125	143	600	163	274	2	**NTX+M-50/143**
65	140	156	600	196	330	2	**NTX+M-65/156**
80	160	178	600	241	405	2	**NTX+M-80/178**
100	200	224	600	373	627	2	**NTX+M-100/224**
125	225	255	600	425	714	2	**NTX+M-125/255**
150	250	278	600	447	752	2	**NTX+M-150/278**
200	315	341	600	706	1186	2	**NTX+M-200/341**
250	400	430	700	1402	2356	2	**NTX+M-250/430**
300	450	480	700	1596	2683	2	**NTX+M-300/480**

Table 30a

Insulation ***PLUS***

DN	Dzp	Dzn	L	A	B	Vent plug and electrically welded plug	Catalogue Reference Number
mm	*mm*	*mm*	*mm*	*g*	*g*	*kpl*	
20	90	107	600	101	169	2	**NTX+M-20/107**
25	110	129	600	151	253	2	**NTX+M-25/129**
32	125	143	600	179	300	2	**NTX+M-32/143**
40	125	143	600	174	292	2	**NTX+M-40/143**
50	140	156	600	215	361	2	**NTX+M-50/156**
65	160	178	600	259	436	2	**NTX+M-65/178**
80	200	224	600	417	702	2	**NTX+M-80/224**
100	225	255	600	480	807	2	**NTX+M-100/255**
125	250	278	600	525	883	2	**NTX+M-125/278**
150	315	341	600	884	1486	2	**NTX+M-150/341**
200	355	383	600	1340	2253	2	**NTX+M-200/383**
250	450	480	700	1948	3275	2	**NTX+M-250/480**

Note:
1. The number of components for dimensions above DN300 is agreed individually with the customer.
2. The sleeve is produced with glue and mastic.
3. The length tolerance L of the radiation cross-linked heat shrinkable sleeve is $^{+10}/_{-20}$ mm
4. Oval - not tolerated.
5. At the customer's request, the heat shrink sleeve can be supplied with two factory-made venting and filling holes for PUR foam, with a place prepared for welding plugs

The table shows the minimum outer diameters of the sleeves.
We also manufacture larger sleeve diameters than those given in the tables above.

8.2.3 Heat shrinkable radiation crosslinked joint, NTX-II type

(Heat-shrinkable PE-Xc sleeve with two factory-made mounting holes with a place prepared for welding the plug)

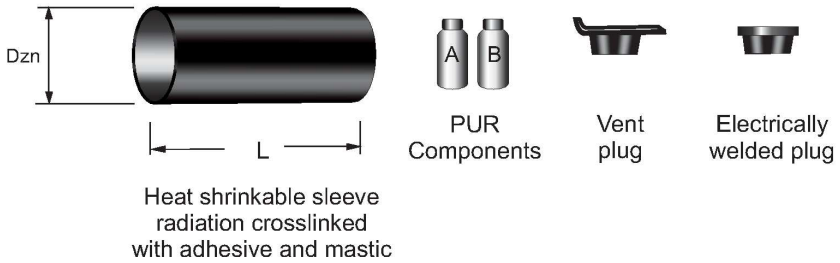

Table 31

Nominal diameter	Carrier pipe external diameter	Sleeve external diameter	Lenght	Components		Vent plug and electric ally welded plug	Catalogue Reference Number
DN	Dzp	Dzn	L	A	B		
mm	*mm*	*mm*	*mm*	*g*	*g*	*kpl*	
20	90	107	600/700	100	169	2	**NTX-II-20/107**
25	90	107	600/700	97	163	2	**NTX-II-25/107**
32	110	129	600/700	145	243	2	**NTX-II-32/129**
40	110	129	600/700	140	236	2	**NTX-II-40/129**
50	125	143	600/700	163	274	2	**NTX-II-50/143**
65	140	156	600/700	196	330	2	**NTX-II-65/156**
80	160	178	600/700	241	405	2	**NTX-II-80/178**
100	200	224	600/700	373	627	2	**NTX-II-100/224**
125	225	255	600/700	425	714	2	**NTX-II-125/255**
150	250	278	600/700	447	752	2	**NTX-II-150/278**
200	315	341	600/700	706	1186	2	**NTX-II-200/341**
250	400	430	700/600	1402	2356	2	**NTX-II-250/430**
300	450	480	700/600	1596	2683	2	**NTX-II-300/480**

Table 31a

Insulation ***PLUS***

DN	Dzp	Dzn	L	A	B	Vent plug and electric ally welded plug	Catalogue Reference Number
mm	*mm*	*mm*	*mm*	*g*	*g*	*kpl*	
20	110	129	600/700	154	259	2	**NTX-II-20/129**
25	110	129	600/700	151	253	2	**NTX-II-25/129**
32	125	143	600/700	179	300	2	**NTX-II-32/143**
40	125	143	600/700	174	292	2	**NTX-II-40/143**
50	140	156	600/700	215	361	2	**NTX-II-50/156**
65	160	178	600/700	259	436	2	**NTX-II-65/178**
80	200	224	600/700	417	702	2	**NTX-II-80/224**
100	225	255	600/700	480	807	2	**NTX-II-100/255**
125	250	278	600/700	525	883	2	**NTX-II-125/278**
150	315	341	600/700	884	1486	2	**NTX-II-150/341**
200	355	383	600/700	1340	2253	2	**NTX-II-200/383**
250	450	480	700/600	1948	3275	2	**NTX-II-250/480**

Note:

1. The number of components for dimensions above DN300 is agreed individually with the customer.
2. The sleeve is produced with glue and matic.
3. The length tolerance L of the radiation cross-linked heat shrinkable sleeve is $^{+10}/_{-20}$ mm.
4. Oval - not tolerated.
5. Hole diameter – 24 mm

The table shows the minimum outer diameters of the sleeves.
We also manufacture larger sleeve diameters than those given in the tables above.

8.2.4 Dry heat shrinkable coupling NTS

(HDPE heat shrinkable sleeve, PUR lag, heat shrinkable band)

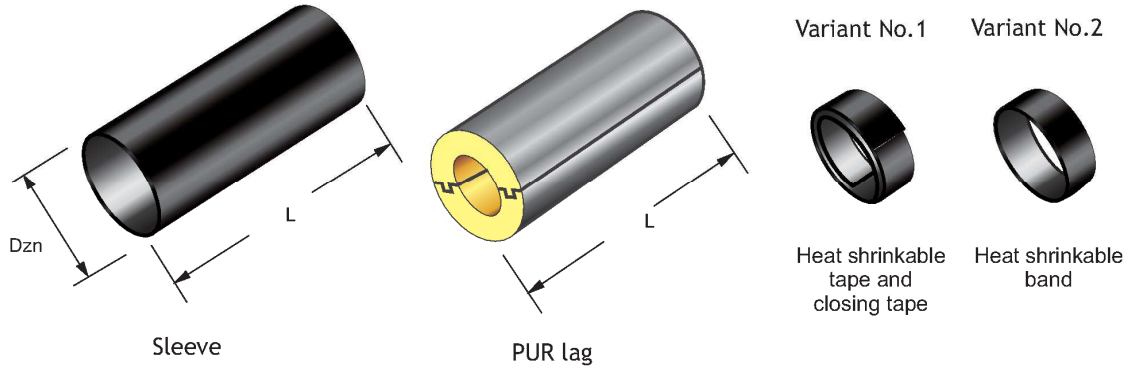

Table 32

Pipe unit		Sleeve		Coupling parts				Catalogue Reference Number
					Wariant 1		Wariant 2	
Nominal diameter	Jacket pipe external diameter	External diameter	Lenght	PUR lag	Heat shrinkable tape	Closing tape	Heat shrinkable band	
DN	Dzp	Dzn	L	L				
mm	*mm*	*mm*	*mm*	*mm*	*cm*	*szt*	*szt*	
20	90	107	600	350	45	2	2	**NTS-20/107**
25	90	107	600	350	45	2	2	**NTS-25/107**
32	110	129	600	350	50	2	2	**NTS-32/129**
40	110	129	600	350	50	2	2	**NTS-40/129**
50	125	143	600	350	55	2	2	**NTS-50/143**
65	140	156	600	350	60	2	2	**NTS-65/156**
80	160	178	600	350	65	2	2	**NTS-80/178**
100	200	224	600	350	80	2	2	**NTS-100/224**
125	225	255	600	350	90	2	2	**NTS-125/255**
150	250	278	600	350	95	2	2	**NTS-150/278**
200	315	341	600	350	120	2	2	**NTS-200/341**
250	400	430	700	450	145	2	2	**NTS-250/430**
300	450	480	700	450	160	2	2	**NTS-300/480**

The table shows the minimum outer diameters of the sleeves.
Oval - not tolerated.

8.2.5 Heat shrinkable bend coupling - NSRK

(Heat shrinkable bend sleeve)

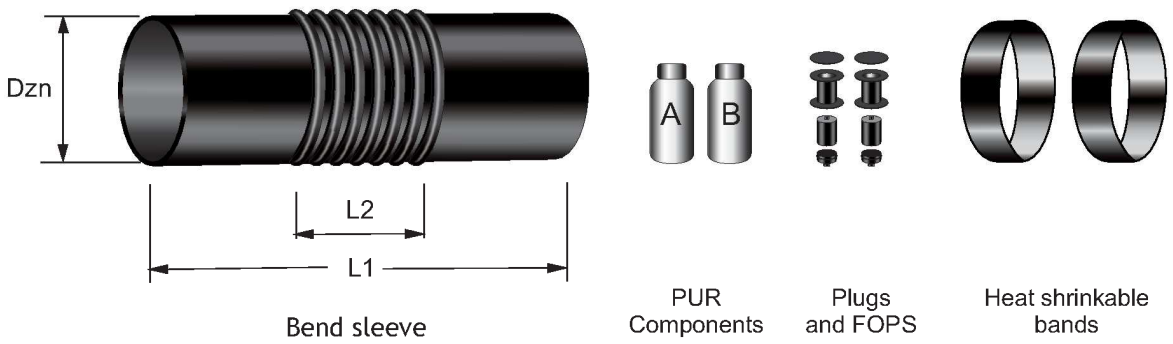

Table 33

Nominal diameter	Jacket pipe external diameter	External diameter	Lenght of bend sleeve		PUR components		Centring element	Heat shrinkable band	Plugs and FOPS	Catalogue Reference Number
DN	Dzp	Dzn	L1	L2	A	B				
mm	*mm*	*mm*	*mm*	*mm*	*g*	*g*	*szt*	*szt*	*kpl*	
25	90	103	980	560	212	356	1	2	1	**NSRK-25/103**
32	110	125	980	560	268	451	1	2	1	**NSRK-32/125**
40	110	125	980	560	259	435	1	2	1	**NSRK-40/125**
50	125	140	1050	630	340	572	1	2	1	**NSRK-50/140**
65	140	156	1050	630	425	714	1	2	1	**NSRK-65/156**
80	160	177	1050	630	526	885	1	2	1	**NSRK-80/177**
100	200	218	1120	700	876	1473	1	2	1	**NSRK-100/218**
125	225	244	1220	800	1122	1885	1	2	1	**NSRK-125/244**
150	250	269	1340	920	1475	2479	1	2	1	**NSRK-150/269**

The table shows the minimum outer diameters of the sleeves.
The lenght L1 given in the table is an example and depends on the manufacturer of the elbow sleeve.
The elbow joint does not include the steel elbow. Hamburg elbow must be ordered separately.

8.3 Electrically Welded Coupling

8.3.1 Electrically Welded Coupling - close type

(HPDE sleeve sealed with heat shrinkable band))

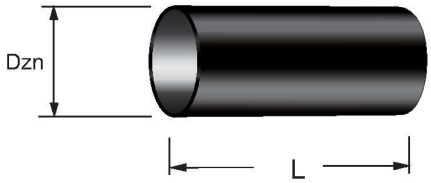

Heat shrinkable sleeve

PUR Components

Vent plug and electrically welded plug

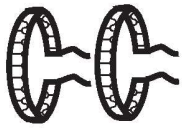

Heating element

Table 34

Nominal diameter	Jacket pipe external diameter	Sleeve external diameter	Lenght	Components		Heating element	Vent plug and electric ally welded plug	Catalogue Reference Number
DN	Dzp	Dzn	L	A	B			
mm	*mm*	*mm*	*mm*	*g*	*g*	*szt*	*kpl*	
20	90	107	600	100	169	2	2	**DT-20/107**
25	90	107	600	97	163	2	2	**DT-25/107**
32	110	129	600	145	243	2	2	**DT-32/129**
40	110	129	600	140	236	2	2	**DT-40/129**
50	125	143	600	163	274	2	2	**DT-50/143**
65	140	156	600	196	330	2	2	**DT-65/156**
80	160	178	600	241	405	2	2	**DT-80/178**
100	200	224	600	373	627	2	2	**DT-100/224**
125	225	255	600	425	714	2	2	**DT-125/255**
150	250	278	600	447	752	2	2	**DT-150/278**
200	315	341	600	706	1186	2	2	**DT-200/341**
250	400	430	700	1402	2356	2	2	**DT-250/430**
300	450	480	700	1596	2683	2	2	**DT-300/480**
350	500	530	700	1925	3237	2	2	**DT-350/530**
400	560	590	700	2186	3674	2	2	**DT-400/590**
450	630	660	700	2926	4918	2	2	**DT-450/660**

* The table shows the minimum outer diameters of the sleeves.
Oval - not tolerated.
We also manufacture larger sleeve diameters than those given in the tables above.

Note: Only available with service of making the joint assembly by ***ZPU Międzyrzecz Sp. z o. o.***

8.3.2 Butt Welded Coupling DX II - open type

(Standard insulation)

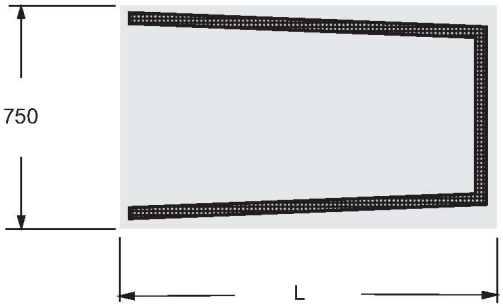

Coupling casing

PUR components

Reinforcing strip

Vent plug

Electrically welded plug

Table 35

Nominal diameter	Jacket pipe external diameter	Plate lenght	Components		Plug	Catalogue Reference Number
DN	Dzp	Dzn	A	B		
mm	*mm*	*mm*	*g*	*g*	*szt*	
32	110	535	105	177	2	**DX II-110/750**
40	110	535	100	169	2	**DX II-110/750**
50	125	583	125	210	2	**DX II-125/750**
65	140	630	144	242	2	**DX II-140/750**
80	160	690	185	311	2	**DX II-160/750**
100	200	820	268	450	2	**DX II-200/750**
125	225	900	314	528	2	**DX II-225/750**
150	250	990	353	593	2	**DX II-250/750**
200	315	1230	533	896	2	**DX II-315/750**
250	400	1500	1130	1900	2	**DX II-400/750**
300	450	1660	1319	2217	2	**DX II-450/750**
350	500	1820	1655	2783	2	**DX II-500/750**
400	560	2000	2007	3373	2	**DX II-560/750**
450	560	2000	1523	2560	2	**DX II-560/750**
500	630	2250	1995	3353	2	**DX II-630/750**
600	800	2870	3702	6223	2	**DX II-800/750**
700	900	3180	4302	7232	2	**DX II-900/750**
800	1000	3500	4903	8242	2	**DX II-1000/750**
900	1100	4128	5539	9310	2	**DX II-1100/750**
1000	1200	4756	6170	10371	2	**DX II-1200/750**

Note: Only available with service of making the joint assembly by ***ZPU Międzyrzecz Sp. z o. o.***

(Insulation PLUS)

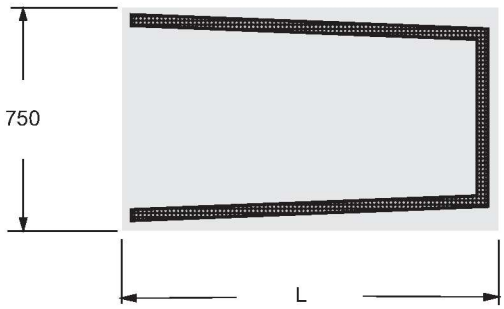

Coupling casing

PUR components

Reinforcing strip

Vent plug

Electrically welded plug

Table 35a

Insulation ***PLUS***

Nominal diameter	Jacket pipe external diameter	Plate lenght	Components		Plus	Catalogue Reference Number
DN	Dzp	Dzn	A	B		
mm	*mm*	*mm*	*g*	*g*	*szt*	
25	110	535	111	186	2	**DX II +110/750**
32	125	583	141	236	2	**DX II +125/750**
40	125	583	136	229	2	**DX II +125/750**
50	140	630	162	273	2	**DX II +140/750**
65	160	693	203	341	2	**DX II +160/750**
80	200	820	312	525	2	**DX II +200/750**
100	225	900	370	622	2	**DX II +225/750**
125	250	990	428	720	2	**DX II +250/750**
150	315	1230	703	1181	2	**DX II +315/750**
200	400	1500	1108	1862	2	**DX II +400/750**
250	450	1660	1655	2782	2	**DX II +450/750**
300	500	1820	1894	3184	2	**DX II +500/750**
350	560	2000	2435	4094	2	**DX II +560/750**
400	630	2000	3024	5083	2	**DX II +630/750**
450	630	2250	2540	4270	2	**DX II +630/750**
500	710	2530	3316	5573	2	**DX II +710/750**
600	900	3180	5780	9716	2	**DX II +900/750**
700	1000	3500	6625	11136	2	**DX II +1000/750**
800	1100	3814	7470	12557	2	**DX II +1100/750**
900	1200	4128	8350	14036	2	**DX II +1200/750**
1000	1300	4442	9341	15693	2	**DX II +1300/750**

Note: Only available with service of making the joint assembly by ***ZPU Międzyrzecz Sp. z o. o.***

9 Insulation and pipeline closing

9.1 Pipeline Closing - End Sleeve

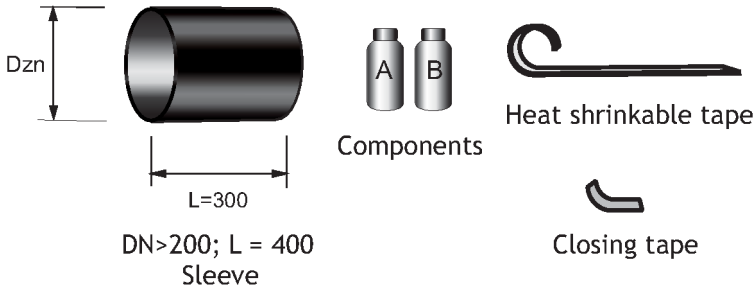

DN>200; L = 400
Sleeve

Table 36

Nominal diameter	Jacket pipe external diameter	Sleeve external diameter	Components		Heat shrinka-ble tape	Closing tape	Catalogue Reference Number
DN	Dzp	Dzn	A	B			
mm	*mm*	*mm*	*g*	*g*	*cm*	*cm*	
20	90	100	59	100	40	15	**NK-20/100**
25	90	100	56	94	40	15	**NK-25/100**
32	110	121	83	140	47	15	**NK-32/120**
40	110	121	79	133	47	15	**NK-40/120**
50	125	136	97	163	52	15	**NK-50/135**
65	140	153	112	188	56	15	**NK-65/150**
80	160	174	144	241	64	15	**NK-80/173**
100	200	216	219	368	76	15	**NK-100/214**
125	225	243	253	426	86	15	**NK-125/240**
150	250	269	279	470	94	15	**NK-150/265**
200	315	338	420	705	115	22	**NK-200/333**
250	400	429	1234	2074	145	22	**NK-250/420**
300	450	472	1414	2377	161	22	**NK-300/472**

Table 36a

Insualtion ***PLUS***

DN	Dzp	Dzn	A	B	Heat shrinka-ble tape	Closing tape	Catalogue Reference Number
mm	*mm*	*mm*	*g*	*g*	*cm*	*cm*	
20	110	121	91	153	47	15	**NK-20/120**
25	110	121	88	149	47	15	**NK-25/120**
32	125	136	111	187	52	15	**NK-32/135**
40	125	136	107	180	52	15	**NK-40/135**
50	140	153	129	217	56	15	**NK-50/150**
65	160	174	160	269	64	15	**NK-65/173**
80	200	216	259	436	76	15	**NK-80/214**
100	225	243	304	511	86	15	**NK-100/240**
125	250	269	349	586	94	15	**NK-125/265**
150	315	338	575	966	115	22	**NK-150/333**
200	355	380	908	1527	145	22	**NK-200/380**
250	450	472	1837	3088	161	22	**NK-250/472**

9.2 End Cap - heat shrinkable sleeve

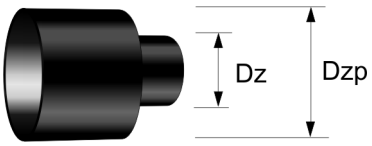

Table 37

Jacket pipe external diameter Dzp	Catalogue Reference Number
90	**E-90**
110	**E-110**
125	**E-125**
140	**E-140**
160	**E-160**
200	**E-200**
225	**E-225**
250	**E-250**
315	**E-315**
400	**E-400**
450	**E-450**
500	**E-500**
560	**E-560**
630	**E-630**
710	**E-710**
800	**E-800**

10 Warning tape

To be placed above a pipeline. Supplied in coils in 100 m multiple lengths. Carries a wording “WARNING! HEAT TRANSMITING PIPE” and a logo

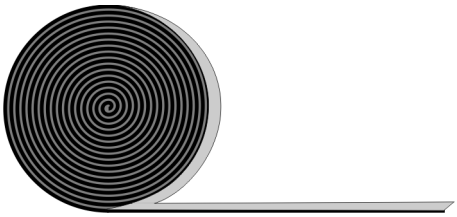

Table 38

	Colour	Width [mm]	Catalogue Reference Number
Warning tape	yellow	150	**T-150**

11 Wall transition

11.1 Rubber ring

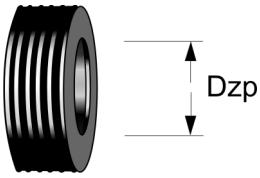

Table 39

Jacket pipe external diameter	Catalogue reference number
Dzp	
90	**P-90**
110	**P-110**
125	**P-125**
140	**P-140**
160	**P-160**
200	**P-200**
225	**P-225**
250	**P-250**
315	**P-315**
400	**P-400**
450	**P-450**
500	**P-500**
560	**P-560**
630	**P-630**
710	**P-710**
800	**P-800**

11.2 Branch-off protective tube - joint adapter

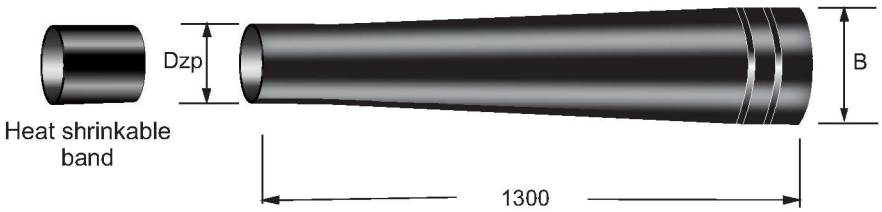

Table 40

Jacket pipe	Dimension	Catalogue reference number
Dzp	B	
mm	*mm*	
90	185	**A-90**
110	195	**A-110**
125	220	**A-125**
140	250	**A-140**
160	280	**A-160**

12 Mains Branching Off

11.1 Cold inset

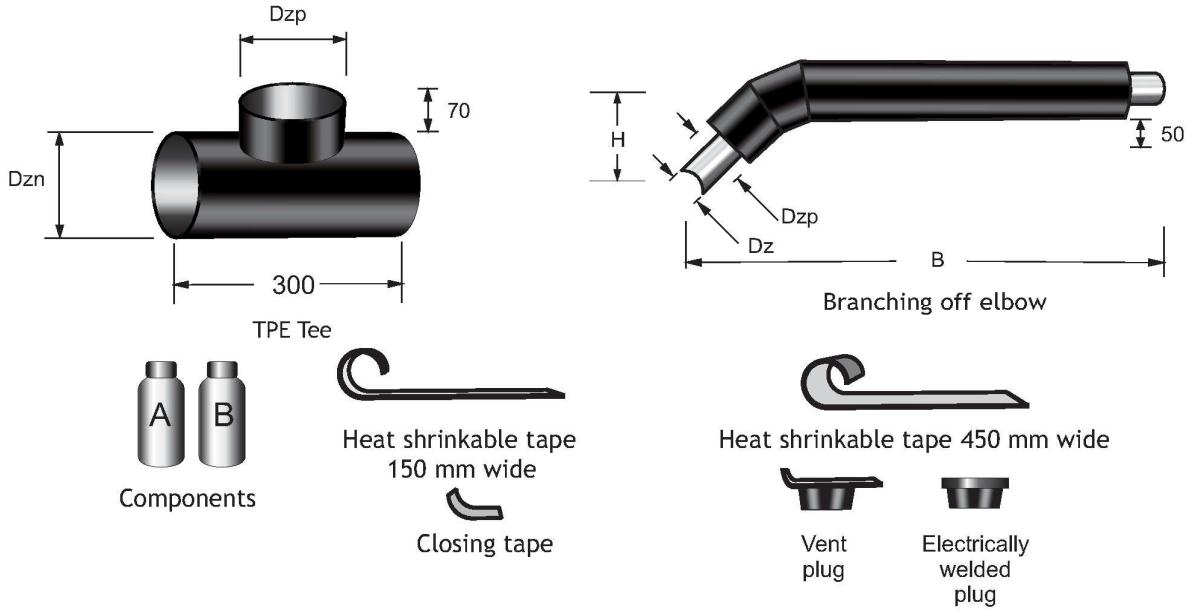

Table 41

Main pipe		Branching off		Branching off elbow		TPE tee		Catalogue Reference number
Nominal diameter	Jacket pipe external diameter	Nominal diameter	Jacket pipe external diameter	H	B	Mains external diameter	Branching off external diameter	
DN	Dzp	DN	Dzp			Dzn	Dzp	
mm	*mm*	*mm*	*mm*	*mm*	*mm*	*mm*	*mm*	
40	110	25	90	160	900	125	125	**TPE-40/25**
50	125	32	110	168	900	140	140	**TPE-50/32**
65	140	40	110	183	1200	160	140	**TPE-65/40**
80	160	50	125	200	1200	200	160	**TPE-80/50**
100	200	65	140	220	1200	225	180	**TPE-100/65**

Note: TPE tees are fabricated to accommodate any mains diameter and branching off pipe diameter up to DN 200.
The TPE tee and branch elbow must be ordered as separate items.

11.2 Hot inset

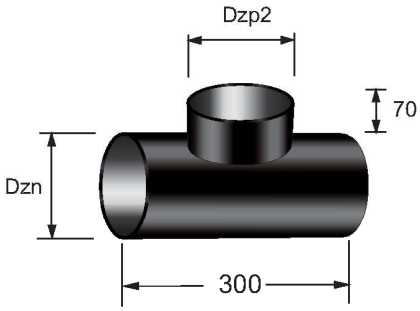

TPG Tee

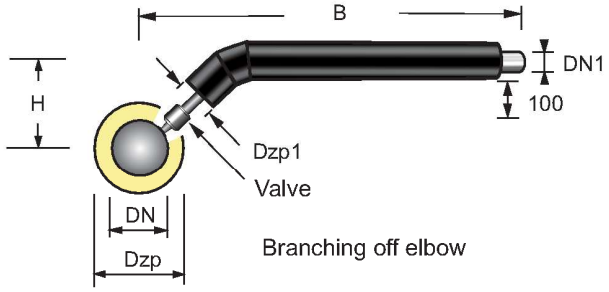

Branching off elbow

Components

Heat shrinkable tape 150 mm wide

Closing tape

Heat shrinkable tape 450 mm wide

Vent plug

Electrically welded plug

Table 42

Main pipe		Branching off		Branching off elbow		TPG tee		Catalogue Reference number
Nominal diameter	Jacket pipe external diameter	Nominal diameter	Jacket pipe external diameter	H	B	Mains external diameter	Branching off external diameter	
DN	Dzp	DN	Dzp1			Dzn	Dzp2	
mm	*mm*	*mm*	*mm*	*mm*	*mm*	*mm*	*mm*	
40	110	25	90	280	900	125	125	**TPG-40/25**
50	125	32	110	310	900	140	140	**TPG-50/32**
65	140	40	110	340	1200	160	140	**TPG-65/40**
80	160	50	125	360	1200	200	160	**TPG-80/50**
100	200	65	140	380	1200	225	180	**TPG-100/65**
125	225	80	160	400	1200	250	200	**TPG-125/80**
150	250	100	200	400	1200	315	250	**TPG-150/100**

Note: TPE tees are fabricated to accommodate any mains diameter and branching off pipe diameter up to DN 150.
TPE, hot tapping valve and branch elbow must be ordered as separate items.

13 Expansion Cushions.

Expansion cushions:
- soft type – PUR
- hard type - PE

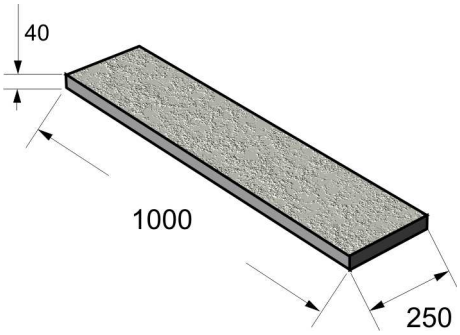

Type 1000×250×40mm

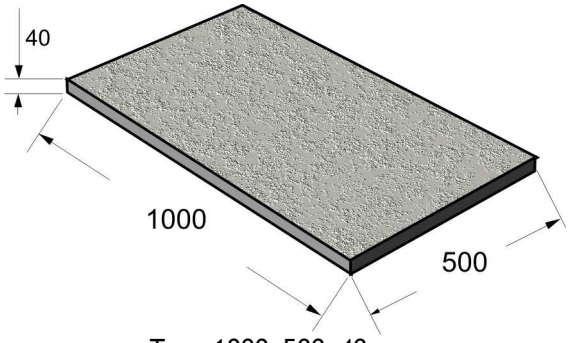

Type 1000×500×40 mm

Table 43

Nominal diameter	Jacket pipe external diameter	Expansion cushions dimension			Expansion cushions type
DN	Dzp	Lenghts	Width	Thickness	
mm	*mm*	*mm*	*mm*	*mm*	
20	90	1000	250	40	1000×250×40
25	90	1000	250	40	1000×250×40
32	110	1000	250	40	1000×250×40
40	110	1000	250	40	1000×250×40
50	125	1000	250	40	1000×250×40
65	140	1000	250	40	1000×250×40
80	160	1000	250	40	1000×250×40
100	200	1000	250	40	1000×250×40
125	225	1000	500	40	1000×500×40
150	250	1000	500	40	1000×500×40
200	315	1000	500	40	1000×500×40
250	400	1000	500	40	1000×500×40
300	450	1000	500	40	1000×500×40

Note: Expansion cushions for preinsulated pipes with diameters DN 300 mm must be the type 1000×500×40 mm. Their quantity will be calculated individually depending on casing pipe diameter.
At the stafe of dubmitting an inquiry or order, the type and dimensions of the expansion cuhions should be specified.

14 Leak detection system

1. Measuring device

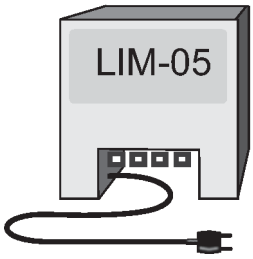

Dimension [mm]			Catalogue Reference number
Lenght	Thickness	Height	
235	143	262	**LIM-05**

2. Leak detection system components

Universal Connection Box

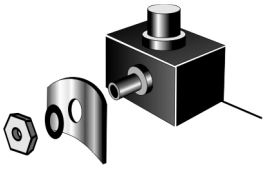

Dimension [mm]			Catalogue Reference number
Lenght	Thickness	Height	
35	35	50	**UPP-1**

Locating device resetting terminal

Dimension [mm]		Catalogue Reference number
Diameter	Lenght	
18	40	**KZL**

Locating device connecting coaxial cable

Dimension [mm]		Catalogue Reference number
Diameter	Lenght	
7	1000	**K-1**
7	2000	**K-2**
7	3000	**K-3**
7	4000	**K-4**
7	5000	**K-5**

Pulse device jumper cable

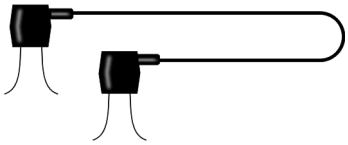

Dimension [mm]		Catalogue Reference number
Diameter	Lenght	
7	5000	**KPS-5**

Pulse device connecting cable

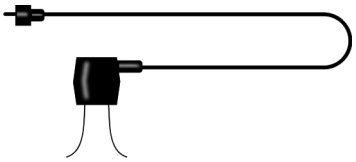

Dimension [mm]		Catalogue Reference number
Diameter	Lenght	
7	5000	**KP-5**

Clamp – to connect coupling assembly

Dimension [mm]		Catalogue Reference number
Diameter	Lenght	
4	15	**S-4**

15 Commercial information

Producer and seller:

Zakład Produkcyjno Usługowy
Międzyrzecz
POLSKIE RURY PREIZOLOWANE Sp. z o. o.,
ul. Zakaszewskiego 4
66-300 Międzyrzecz,

www.zpum.pl **zpu@zpum.pl**

Phones :

Secretary:	+48 95 741 25 26, 742 00 93, 742 33 00
Domestic Trade Department:	+48 95 742 33 43, 742 33 31
Foreign Trade Department:	+48 95 742 33 55, 742 33 38
Technical Department:	+48 95 742 33 18
Purchase Department:	+48 95 742 33 11, 742 33 46
Quality Department:	+48 95 742 33 22
Warenhouse Department:	+48 95 742 33 28
Fax.	+48 95 742 33 01, 742 33 02